OSPREY CH7500 TOP MOUNT CONTROL
(LEVER ON RIGHT)

APPLICATIONS

Dual-function control - one lever controls throttle and shift. For nearly any engine

FEATURES

- All controls include start in gear protection
- Designed for use with both universal and OEM shift and throttle cable connections
- Suitable for most single engine/single station combinations
- Dual action lever (throttle and shift control on one handle)
- Optional neutral interlock available
- Trim, Tilt, options available
- Drag adjustment on all models
- Easy installation and set up
- Neutral “warm up” button for throttle only operation
- Made in the USA

CH7542P Pictured

The ergonomics and features of our CH7500 controls are advanced beyond those of any other control on the market. A shapely, balanced handle design provides an incredibly smooth yet positive feel, throttle warm-up and start-in-gear protection features are standard on all CH7500 models, with neutral interlock and power trim/tilt offered as an option.

In addition the cosmetics of these controls can be configured to many tastes. CH7500 controls are suitable for use with both universal type 3300/33c or OEM type control cables without the need for additional adaptors.

NOTES: The handle is on the right side of the dome. For left side handle see CH7600 series.

When properly installed, these engine controls will connect to outboard, stern drive and inboard engines, utilizing Mercury/Mariner® and OMC® OEM type control cables as well as universal 3300/33C type cables and engine connection kits.

ORDER INFORMATION

ENGINE CONTROLS	PART No.
Single Top-Mount Control - Lever on the Right	
Single Top-Mount, Chrome Handle, Chrome Cover, Chrome and Black Inserts	CH7540P
Single Top-Mount, Chrome Handle, Chrome Cover, Chrome and Black Inserts, with Trim	CH7541P
Single Top-Mount, Chrome Handle, Chrome Cover, Chrome and Black Inserts, with Trim & Tilt	CH7542P
Single Top-Mount Control with Neutral Interlock - Lever on the Right	
Single Top-Mount, Chrome Handle, Chrome Cover, Chrome and Black Inserts, with Neutral Interlock	CH7550P
Single Top-Mount, Chrome Handle, Chrome Cover, Chrome and Black Inserts, with Trim, with Neutral Interlock	CH7551P
Single Top-Mount, Chrome Handle, Chrome Cover, Chrome and Black Inserts, with Trim & Tilt, with Neutral Interlock	CH7552P

Issue Date - Oct 2013
Issue Number - mcda4

OSPREY CH7500 TOP MOUNT CONTROL
(LEVER ON RIGHT)

ORDER INFORMATION

SERVICE ITEMS	
Dome Cover-CH7500/CH7600-Chrome	7214113
Insert Kit CH7500-with & w/o Tilt hole - Black (2 inserts)	7214518
Insert Kit CH7500-with & w/o Tilt hole - Chrome (2 inserts)	7214311
Neutral Warm-up Button Kit - CH7500/CH7600	7214715
Tilt Switch-CH7500/CH7600 - with Chrome & Black Insert Kit	7206216
Cable Nest And Connection Kit	212151-003

TECHNICAL DATA

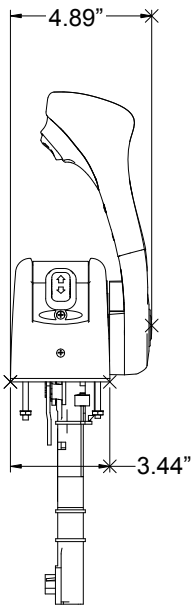

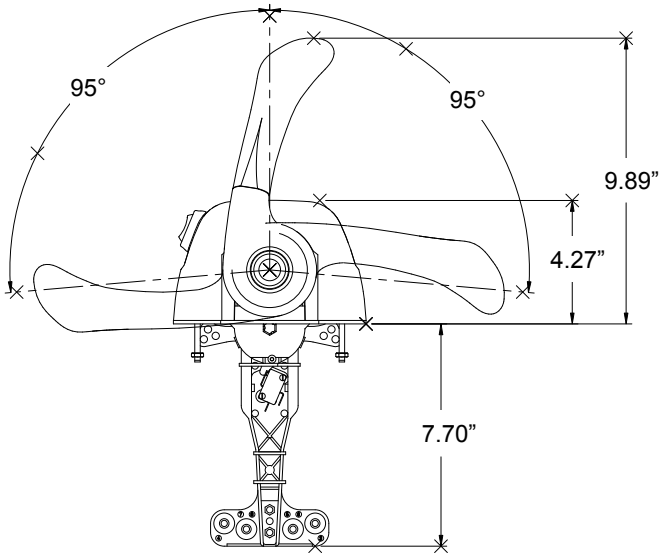

CH7500 Hole Cutout

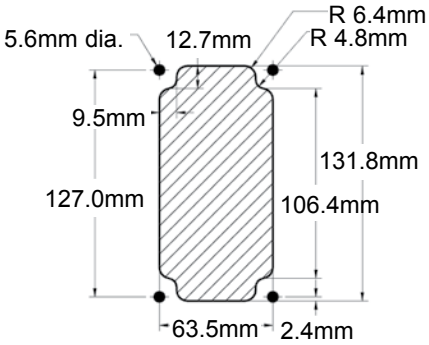

Issue Date 2013
Issue Number - mcda4