Smart choice for power™

xantrex™

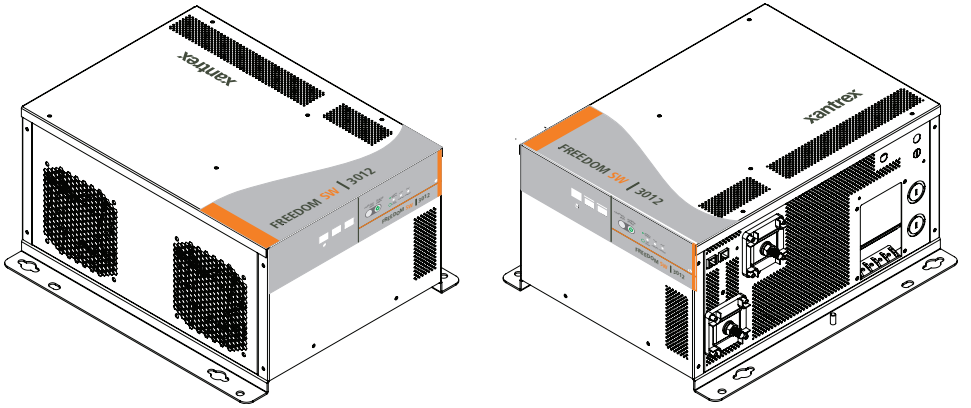

Freedom SW 3012 shown.

Freedom SW
Sine Wave Inverter/Chargers

Installation Guide

Model Numbers

815-3012, 815-3024
815-2012, 815-2024

xanbus™
ENABLED

This guide for use by qualified installers only.

Copyright © 2013 Schneider Electric. All Rights Reserved. All trademarks are owned by Schneider Electric Industries SAS or its affiliated companies.

Exclusion for Documentation

UNLESS SPECIFICALLY AGREED TO IN WRITING, SELLER

(A) MAKES NO WARRANTY AS TO THE ACCURACY, SUFFICIENCY OR SUITABILITY OF ANY TECHNICAL OR OTHER INFORMATION PROVIDED IN ITS MANUALS OR OTHER DOCUMENTATION;

(B) ASSUMES NO RESPONSIBILITY OR LIABILITY FOR LOSSES, DAMAGES, COSTS OR EXPENSES, WHETHER SPECIAL, DIRECT, INDIRECT, CONSEQUENTIAL OR INCIDENTAL, WHICH MIGHT ARISE OUT OF THE USE OF SUCH INFORMATION. THE USE OF ANY SUCH INFORMATION WILL BE ENTIRELY AT THE USER'S RISK; AND

(C) REMINDS YOU THAT IF THIS MANUAL IS IN ANY LANGUAGE OTHER THAN ENGLISH, ALTHOUGH STEPS HAVE BEEN TAKEN TO MAINTAIN THE ACCURACY OF THE TRANSLATION, THE ACCURACY CANNOT BE GUARANTEED. APPROVED CONTENT IS CONTAINED WITH THE ENGLISH LANGUAGE VERSION WHICH IS POSTED AT WWW.XANTREX.COM.

Document Part Number

97-0020-01-01

Date and Revision

September 2013 Rev D

Product Numbers

815-2012 (Freedom SW 2012), 815-2024 (Freedom SW 2024)
815-3012 (Freedom SW 3012), 815-3024 (Freedom SW 3024)

Contact Information

Telephone: 1 800 670 0707 (toll free North America)
1 408 987 6030 (direct)

Web: www.xantrex.com

Information About Your System

As soon as you open your product, record the following information and be sure to keep your proof of purchase.

Serial Number _____

Product Number _____

Purchased From _____

Purchase Date _____

To view, download, or print the latest revision, visit the website shown under Contact Information.

This guide for use by qualified installers only.

About This Guide

Purpose

The purpose of this Installation Guide is to provide explanations and procedures for installing the Freedom SW Inverter/Charger.

Scope

The Guide provides safety and installation guidelines as well as information on tools and wiring. It does not provide details about particular brands of batteries. You need to consult individual battery manufacturers for this information.

Audience

The guide is intended for qualified installers and technicians of the Freedom SW Inverter/Charger.

Conventions Used

The following conventions are used in this guide.

⚠ DANGER

STATEMENT OF HAZARD

Contains statements of avoidance or strict compliance.

Failure to follow these instructions will result in death or serious injury.

⚠ WARNING

STATEMENT OF HAZARD

Contains statements of avoidance or strict compliance.

Failure to follow these instructions can result in death or serious injury.

⚠ CAUTION

STATEMENT OF HAZARD

Contains statements of avoidance or strict compliance.

Failure to follow these instructions can result in minor or moderate injury.

CAUTION

STATEMENT OF HAZARD

Contains statements of avoidance or strict compliance.

Failure to follow these instructions can damage the unit and/or damage other equipment.

IMPORTANT: These notes describe things which are important for you to know, however, they are not as serious as a caution or warning.

Related Information

You can find more information about Xantrex Technology Inc. as well as its products and services at **www.xantrex.com**.

This guide for use by qualified installers only.

Important Safety Instructions

IMPORTANT: READ AND SAVE THIS INSTALLATION GUIDE FOR FUTURE REFERENCE.

This chapter contains important safety and installation instructions for the Freedom SW Inverter/Charger (Freedom SW). Each time, before using the Freedom SW, READ ALL instructions and cautionary markings on or provided with the inverter/charger, the batteries, and all appropriate sections of this guide.

NOTE: The Freedom SW contains no user-serviceable parts. See "Warranty and Return Information" on the Owner's Guide for guidance.

⚠ DANGER

ELECTRICAL SHOCK HAZARD

- Do not expose the Freedom SW to rain, snow, spray, or bilge water. This inverter/charger is designed for marine applications only when additional drip protection is installed in certain orientations. See the installation guide for information.
- Do not operate the inverter/charger if it has received a sharp blow, been dropped, has cracks or openings in the enclosure including if the fuse cover has been lost, damaged, or will not close, or otherwise damaged in any other way.
- Do not disassemble the inverter/charger. Internal capacitors remain charged after all power is disconnected.
- Disconnect both AC and DC power from the inverter/charger before attempting any maintenance or cleaning or working on any circuits connected to the inverter/charger. See note below.
- Do not operate the inverter/charger with damaged or substandard wiring. Make sure that all wiring is in good condition and is not undersized.

Failure to follow these instructions will result in death or serious injury.

NOTE: Turning off the inverter/charger using the on/off switch on the front panel will not reduce an electrical shock hazard.

⚠ DANGER

FIRE AND BURN HAZARD

- Do not cover or obstruct the air intake vent openings and/or install in a zero-clearance compartment.
- Do not use transformerless battery chargers in conjunction with the inverter/charger due to overheating.

Failure to follow these instructions will result in death or serious injury.

⚠ DANGER

EXPLOSION HAZARD

- Charge only properly rated (such as 12 V) lead-acid (GEL, AGM, Flooded, or lead-calcium) rechargeable batteries because other battery types may explode and burst.
- Do not work in the vicinity of lead-acid batteries. Batteries generate explosive gases during normal operation. See note #1.
- Do not install and/or operate in compartments containing flammable materials or in locations that require ignition-protected equipment. See notes #2 and #3.

Failure to follow these instructions will result in death or serious injury.

NOTES:

1. Follow these instructions and those published by the battery manufacturer and the manufacturer of any equipment you intend to use in the vicinity of the battery. Review cautionary markings on these products and on the engine.
2. This inverter/charger contains components which tend to produce arcs or sparks.
3. Locations include any space containing gasoline-powered machinery, fuel tanks, as well as joints, fittings, or other connections between components of the fuel system.

This guide for use by qualified installers only.

Precautions When Working With Batteries

⚠ WARNING

BURN FROM HIGH SHORT-CIRCUIT CURRENT, FIRE AND EXPLOSION FROM VENTED GASES HAZARDS

- Always wear proper, non-absorbent gloves, complete eye protection, and clothing protection. Avoid touching your eyes and wiping your forehead while working near batteries. See note #4.
- Remove all personal metal items, like rings, bracelets, and watches when working with batteries. See notes #5 and #6 below.
- Never smoke or allow a spark or flame near the engine or batteries.
- Never charge a frozen battery.

Failure to follow these instructions can result in death or serious injury.

NOTES:

1. Mount and place the Freedom SW Inverter/Charger unit away from batteries in a well ventilated compartment.
2. Always have someone within range of your voice or close enough to come to your aid when you work near a lead-acid battery.
3. Always have plenty of fresh water and soap nearby in case battery acid contacts skin, clothing, or eyes.
4. If battery acid contacts skin or clothing, wash immediately with soap and water. If acid enters your eye, immediately flood it with running cold water for at least twenty minutes and get medical attention immediately.
5. Use extra caution to reduce the risk or dropping a metal tool on the battery. It could spark or short circuit the battery or other electrical parts and could cause an explosion.
6. Batteries can produce a short circuit current high enough to weld a ring or metal bracelet or the like to the battery terminal, causing a severe burn.
7. When removing a battery, always remove the negative terminal from the battery first for systems with grounded negative. If it is grounded positive, remove the positive terminal first. Make sure all loads connected to the battery and all accessories are off so you don’t cause an arc.

Precautions When Preparing to Charge

⚠ WARNING

EXPOSURE TO CHEMICALS AND GASES HAZARD

- Make sure the area around the battery is well ventilated.
- Make sure the voltage of the batteries matches the output voltage of the inverter/charger.
- Be careful to keep corrosion from coming into contact with your eyes and skin when cleaning battery terminals.

Failure to follow these instructions can result in death or serious injury.

NOTES:

- Study and follow all of the battery manufacturer's specific precautions, such as removing or not removing cell caps while charging, whether equalization is acceptable for your battery, and recommended rates of charge.
- For flooded non-sealed batteries, add distilled water in each cell until battery acid reaches the level specified by the battery manufacturer. This helps to purge excessive gas from cells. Do not overfill. For a battery without removable cell caps, carefully follow manufacturer's instructions.

Precautions When Placing the Inverter/Charger

CAUTION

RISK OF DAMAGE TO THE INVERTER/CHARGER

- Never allow battery acid to drip on the inverter/charger when reading gravity, or filling battery.
- Never place the Freedom SW Inverter/Charger unit directly above batteries; gases from a battery will corrode and damage the inverter/charger.
- Do not place a battery on top of the inverter/charger.

Failure to follow these instructions can damage the unit and/or damage other equipment.

This guide for use by qualified installers only.

Regulatory

The Freedom SW Inverter/Charger is certified to appropriate US and Canadian standards. For more information see “Regulatory Approvals” on the Specifications section in the Owner’s Guide.

The Freedom SW Inverter/Charger is intended to be used for mobile or commercial applications. This inverter/charger is designed for marine applications only when additional drip protection is installed in certain orientations.

It is not intended for other applications as it may not comply with the additional safety code requirements needed for those other applications. See “Limitations On Use” below.

⚠ WARNING

LIMITATIONS ON USE

- Do not use in connection with life support systems or other medical equipment or devices.
- Do not use in ambulances or other life-saving emergency vehicles.

Failure to follow these instructions can result in death or serious injury.

FCC Information to the User

This equipment has been tested and found to comply with the limits for a Class B digital device, pursuant to part 15 of the FCC Rules. These limits are designed to provide reasonable protection against harmful interference in a residential installation. This equipment generates, uses, and can radiate radio frequency energy and, if not installed and used in accordance with the instructions, may cause harmful interference to radio communications.

However, there is no guarantee that interference will not occur in a particular installation. If this equipment does cause harmful interference to radio or television reception, which can be determined by turning the equipment off and on, the user is encouraged to try to correct the interference by one or more of the following measures:

- Reorient or relocate the receiving antenna.
- Increase the separation between the equipment and receiver.
- Connect the equipment into an outlet on a circuit different from that to which the receiver is connected.
- Consult the dealer or an experienced radio/TV technician for help.

CAUTION

Unauthorized changes or modifications to the equipment could void the user’s authority to operate the equipment.

Contents

Important Safety Instructions iv
Introduction 1
Materials List 2
Installation Information 3
Before You Begin the Installation 3
Installation Codes 3
About the Xanbus System 4
Xanbus System 4
Xanbus-enabled Products and Accessories 5
Planning the Installation 6
Two Key Performance Factors 6
Size and Length of DC Cables 6
Mounting Location of the Freedom SW 6
Planning Preparations 7
AC, DC, and Network Components 7
AC Components 11
AC Input for Single AC Line Models 11
AC Input for Dual AC Line Models 11
AC Output 12
AC Loads 12
AC Disconnect and Over-Current Protection Device 12
Distribution Panels 13
AC Wiring 13
AC Output Neutral Bonding 15

This guide for use by qualified installers only.

DC Components 16
Batteries 16
DC Cabling 16
DC Disconnects and Over-Current Devices 17
DC Grounding 17
Unpacking and Inspecting the Freedom SW Inverter/Charger 18
Installation Tools and Materials 19
Tools 19
Materials 19
Installing the Inverter/Charger 20
Overview 20
Step 1: Choosing a Location for the Inverter/Charger 21
Step 2: Mounting the Inverter/Charger 23
Considerations 23
Step 3: Connecting the AC Input and AC Output Wires 27
General AC Wiring Considerations 27
Connecting AC Input Wires 28
Connecting the AC Output Wires 30
Step 4: Connecting the DC Cables 31
DC Connection Precautions 31
Recommended Cable Sizes and Lengths and Fuse Size 31
Preparing the Cables 31
Guidelines for Routing the DC Cables 32
Connecting the DC Cables to the Inverter/Charger 33
DC Grounding 35

Step 5: Connecting the Battery Temperature Sensor (BTS) 36
Mounting Options 36
Mounting to the Negative Battery Terminal 37
Mounting to the Side of the Battery Case 39
Step 6: Connecting to the Network 40
Step 7: Performing Checks Prior to Initial Start-Up 41
Step 8: Testing Your Installation 42
Testing in Invert Mode 42
Testing in Charge Mode and AC Bypass Mode 43
Installation Complete 43
Stacking Features 44
Parallel Stacking 45
Series Stacking 46
Stacking Cable 47
Series Stacking Operation 47
DC Connections for Stacked Inverters 48
Neutral Wiring for Stacked Inverters 49
Configuring System for Stacked Operation 49
Search Mode in Series Stacking 50
Search Mode Operation in Parallel Stacking 51
Disabling Search Mode on the Master Unit 51
Setting Search Mode on the Slave Unit 51
Wiring Schematic 51
Charger settings in a Dual Freedom SW configuration 52
Calculations 52

This guide for use by qualified installers only.

Examples 52
Inverter/Charger Physical Specifications 54
Battery Information 55
Battery Bank Sizing 55
Estimating Battery Requirements 55
Calculating Battery Size 55
Battery Banks 57
Battery Bank Sizing Worksheet 57
Restrictions on Motor Size 57
Battery Cabling and Hook-up Configurations. 59
Battery Parallel Connection 59
Battery Series Connection 60
Battery Series-Parallel Connections 60
Specifications 61
Inverter Drip Shield Installation 65

Introduction

The Installation Guide provides detailed information for installing the Freedom SW Inverter/Charger and the battery temperature sensor, wiring the inverter/charger to the AC and DC circuits, and connecting the inverter/charger to the Xanbus system.

The Freedom SW is a Xanbus-enabled device that typically powers the Xanbus system.

This Installation Guide provides:

- safety instructions that must be observed during installation.
- a typical Xanbus system diagram (if applicable).
- information on additional required AC and DC components.
- a list of installation tools and materials.
- detailed procedures for a typical installation.

This guide for use by qualified installers only.

Freedom SW 3K2K InvChg Install Guide.book Page 2 Wednesday, October 9, 2013 1:32 PM

Materials List

The Freedom SW ships with the following items:

- one Freedom SW unit
- owner's and installation guides
- Battery Temperature Sensor (BTS)
- DC terminal covers (one red, one black) with two sets of screws,
- two Xanbus network terminators
- two sets of nuts and washers for the DC terminals

NOTE: If any of the items are missing, contact customer service or any authorized Xantrex dealer for replacement. See "Contact Information" on page i.

IMPORTANT: Keep the carton and packing material in case you need to return the Freedom SW for servicing.

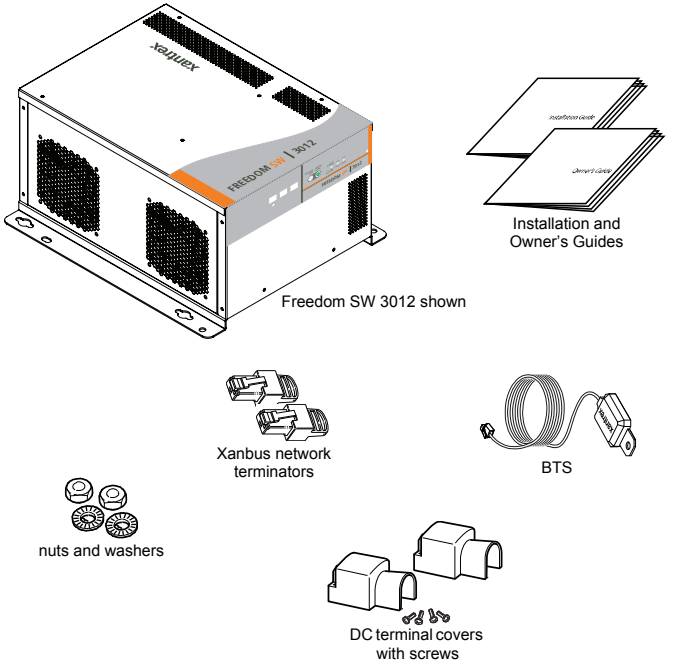

Figure 1 Materials List

Installation Information

Before You Begin the Installation

Before beginning your installation:

- Read the entire Installation Guide so you can plan the installation from beginning to end.
- Assemble all the tools and materials you require for the installation.
- Review the Important Safety Instructions on page iv.
- Be aware of all safety and electrical codes which must be met.

⚠ DANGER

ELECTRICAL SHOCK AND FIRE HAZARDS

- All wiring should be done by qualified personnel to ensure compliance with all applicable installation codes and regulations.
- Disconnect all AC and DC power sources.
- Disable and secure all AC and DC disconnect devices and automatic generator starting devices.

Failure to follow these instructions will result in death or serious injury.

Installation Codes

Applicable installation codes vary depending on the specific location and application of the installation. Some examples are:

- The U.S. National Electrical Code (NEC)
- The Canadian Electrical Code (CEC)
- Canadian Standards Association (CSA) and RV Industry Association (RVIA) for installation in RVs
- ABYC E11 - Alternating Current and Direct Current Electrical Systems on Boats
- ABYC A31 - Battery Chargers and Inverters

This guide for use by qualified installers only.

About the Xanbus System

Xanbus System

The Xanbus system includes the Freedom SW and other Xanbus-enabled devices. The Freedom SW is the device in a Xanbus system that typically provides network power—500 mA at 12 volts DC. All of the Xanbus-enabled devices, such as the Freedom SW, the SCP, and the AGS are able to communicate their settings and activity to each other.

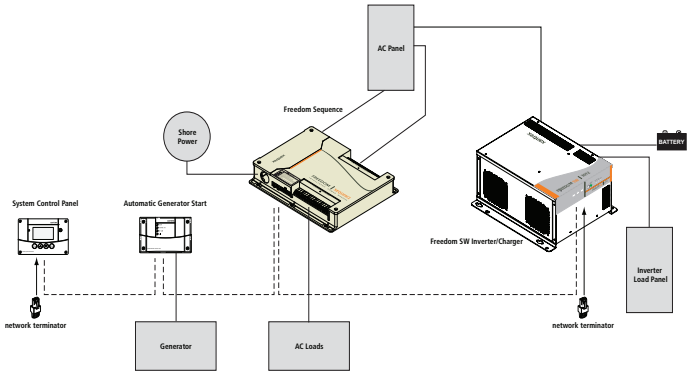

Figure 2 Typical Xanbus System Diagram

Freedom SW 3K2K InvChg Install Guide.book Page 5 Wednesday, October 9, 2013 1:32 PM

The Xanbus-enabled designation (see below) means that this product works on a Xanbus network. Xanbus-enabled products are:

- Simple to operate and routine tasks are automated.
- Controlled by software that eliminates analog signalling errors.
- Less susceptible to interference and line loss.
- Upgradable through new software releases.

xanbus
ENABLED

For detailed instructions and a complete list of Xanbus-enabled devices, visit **www.xantrex.com**

Xanbus-enabled Products and Accessories

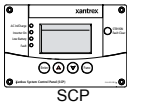

SCP

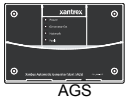

AGS

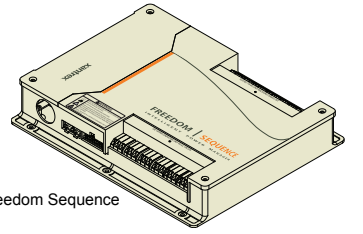

Freedom Sequence

3-ft cable

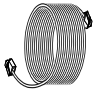

25-ft cable

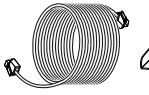

75-ft cable

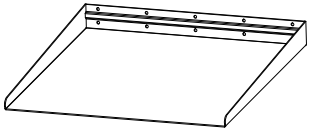

Inverter drip shield

Product/Accessory (Not Shown)	Product Number/s
Freedom SW On/Off Switch	808-9002
GFCI receptacles	808-9003
Stacking cable	808-9005

Product/Accessory (Shown above)	Product Number/s
Freedom Sequence Intelligent Power Manager	809-0912 / 809-0913
Xanbus System Control Panel (SCP)	809-0921
Xanbus Automatic Generator Start (AGS)	809-0915
3-ft network cable (0.9 m)	809-0935
25-ft network cable (7.6 m)	809-0940
75-ft network cable (22.9 m)	809-0942
Inverter drip shield	808-9004

This guide for use by qualified installers only.

Planning the Installation

This section provides information to help you plan for a basic installation of the Freedom SW.

As your system configuration is determined, record the details in "Information About Your System" in the *Freedom SW Sine Wave Inverter/Charger Owner's Guide*.

Two Key Performance Factors

Two key factors in particular will have a major impact on system performance.

Size and Length of DC Cables

To select the appropriate size and length of DC cables, see "DC Cabling" on page 16.

The DC cables should be as short as possible and large enough to handle the required current, in accordance with the electrical codes or regulations applicable to your installation. If there are long battery cables which are in excess of 10 feet each and not of sufficient size, the voltage drop across the cables will have a negative impact on overall system performance.

Mounting Location of the Freedom SW

To choose an appropriate location for mounting the inverter/charger, see "Step 1: Choosing a Location for the Inverter/Charger" on page 21.

Planning Preparations

AC, DC, and Network Components

For a successful installation, you need to plan for AC, DC, and network components of the power system. The AC and DC components are described in this section and illustrated in Figure 3 on page 8.

AC components include:

- AC Input for Dual AC Line Models,
  AC Input for Single AC Line Models
- AC Loads
- AC Disconnect and Over-Current Protection Device
- Distribution Panels
- AC Wiring
- AC Output Neutral Bonding

DC components include:

- Batteries
- DC Cabling
- DC Cabling
- DC Grounding

Network considerations for Freedom SW only include:

- Cables, connectors, network connectors, and terminators for the SCP and Automatic Generator Start, if installing.

  Detailed information on planning and installing your network is available in the *Xanbus System Installation Guide.* Refer to the system guide to determine the type of network layout to install, as well as guidelines for installing the network. This guide is available for download at **www.xantrex.com**

This guide for use by qualified installers only.

Freedom SW 3K2K InvChg Install Guide.book Page 8 Wednesday, October 9, 2013 1:32 PM

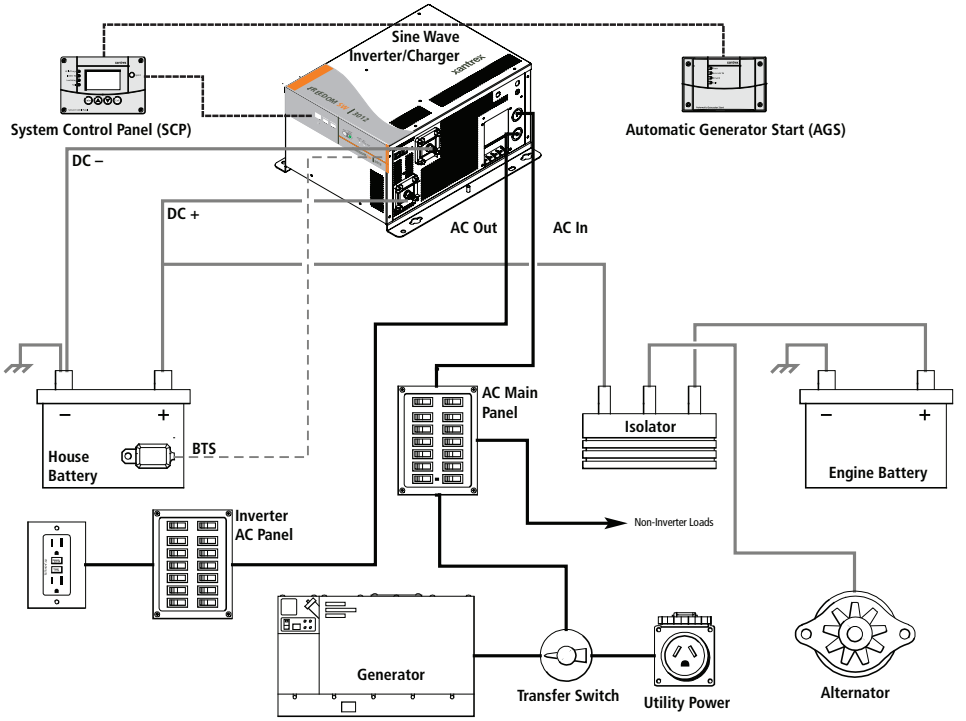

IMPORTANT: Figure 3 does not show all required grounding or overcurrent protection. See the next two pages as well as on page 17 for required DC grounding or overcurrent protection.
Always hire a qualified installer or you must be the one to ensure that all electrical safety requirements are met before, during, and after installation.

Legend:

- -------- Xanbus Network
- ——— AC
- ——— DC
- - - - Low Voltage DC

Figure 3 Typical Recreational Vehicle Electrical System

Freedom SW 3K2K InvChg Install Guide.book Page 9 Wednesday, October 9, 2013 1:32 PM

IMPORTANT: Read Owner's and Installation Guides prior to installation. Always refer to local and national electrical codes for proper wire and breaker sizes prior to installation.

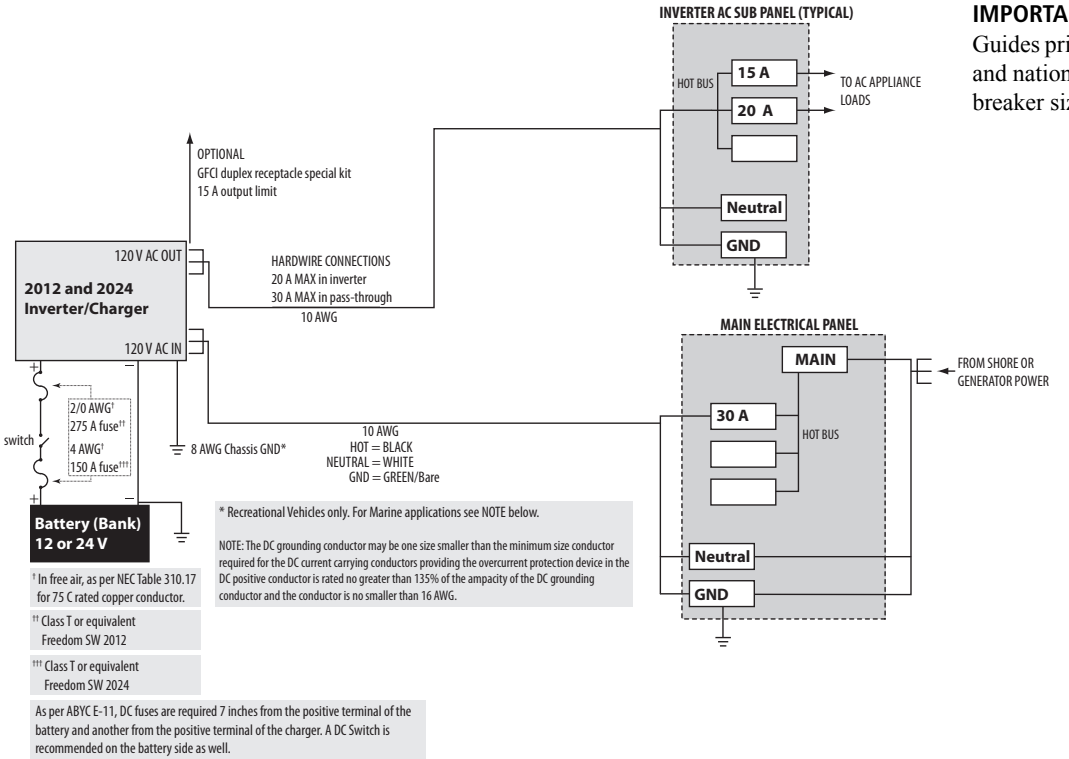

Figure 4 Wiring and Breakers Block Diagram for Freedom SW 2012 / 2024

This guide for use by qualified installers only.

Freedom SW 3K2K InvChg Install Guide.book Page 10 Wednesday, October 9, 2013 1:32 PM

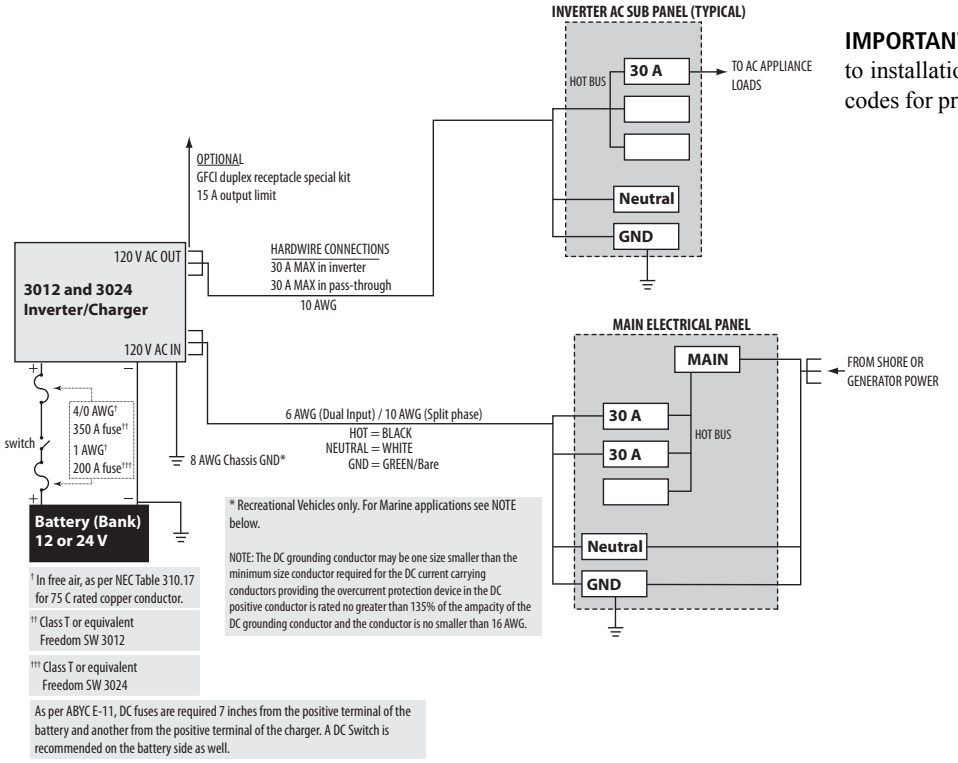

IMPORTANT: Read Owner's and Installation Guides prior to installation. Always refer to local and national electrical codes for proper wire and breaker sizes prior to installation.

Figure 5 Wiring and Breakers Block Diagram for Freedom SW 3012 / 3024

Freedom SW 3K2K InvChg Install Guide.book Page 11 Wednesday, October 9, 2013 1:32 PM

AC Components

NOTE: Unless otherwise referenced specifically by product name, the components refer to all models of Freedom SW inverter/chargers.

AC Input for Single AC Line Models

AC input (to a single AC line model such as Freedom SW 2012 inverter/charger) can be supplied from a single-phase 120-volt 60-Hz AC source such as the utility grid (power company), a generator, or the output of a transfer switch.

AC Input for Dual AC Line Models

AC inputs (to a dual AC line model such as Freedom SW 3012 inverter/charger) can be supplied from a split-phase or dual-input AC source such as the utility grid (power company), a generator, or the output of a transfer switch. The Freedom SW can be operated from the following types of 120 volt 60 Hz AC sources:

- Split phase: This source type has two lines, one neutral, and one ground. The two 120 volts AC lines are 180 degrees out of phase with each other, so that the two voltages total to 240 volts AC line to line. The voltage between each line and neutral is still 120 volts AC, and the voltage between the neutral and ground is approximately zero.

  Because the two lines are out of phase, the currents from each line subtract in the neutral, and the neutral current will be approximately zero if the loads are equal. For example, if Line 1 is supplying 20 amps and Line 2 is supplying 15 amps, the current in the neutral will be 5 amps.
- Dual input: This source type has two line inputs, one neutral, and one ground. Unlike the split-phase type, the two lines are in phase (not out of phase), and must come from the same source. The voltage between the two lines is zero. The voltage between each line and the neutral is 120 volts AC, and the voltage between the neutral and ground is approximately zero.

  Because the two lines are in phase, the currents from each line add together in the neutral. For example, if Line 1 is supplying 20 amps and Line 2 is supplying 15 amps, the current in the neutral will be 35 amps.

This guide for use by qualified installers only.

Freedom SW 3K2K InvChg Install Guide.book Page 12 Wednesday, October 9, 2013 1:32 PM

AC Output

The output voltage on Freedom SW inverter/chargers is 120Vac. The AC output line configuration depends on the model.

- Single AC Line models have a Single Input and Single Output line (SI-SO) configuration.
- Dual AC Line models support Dual Input and Dual Output lines (DI-DO) configuration.

AC Loads

The Freedom SW is intended to power loads consisting of 120 volts AC appliances.

In Invert mode, the Freedom SW connects L1 and L2 output lines together to provide 120 volts AC to loads on either line. In AC Bypass mode, the source connected to the AC input is passed through to the load. Because of the way invert mode operates, only 120 volts AC appliances can be connected to the Freedom SW output.

AC Disconnect and Over-Current Protection Device

To meet CSA, UL, and electrical code requirements, and to protect system wiring, the AC inputs and outputs of the inverter/charger must be provided with overcurrent protection on both the AC input and output. This protection may be a circuit breaker or a fuse with a disconnect device (for simplicity the following refers to breakers). Refer to your applicable installation codes and the following requirements:

AC Input Protection

The breakers protecting the AC input of the Freedom SW must be approved for use on 120 volts AC branch circuits, and must be located in each Line. The breakers must be rated as shown below:

- Split-phase input: No more than 30 amps max in each line.
- Dual input: The neutral current in a dual-input system is the sum of the two line currents, and must be limited to 60 amps maximum to protect the transfer relay in the Freedom SW. Each breaker must not exceed 30 amps, and the total (sum) of the ratings of the two breakers must not exceed 60 amps.

AC Output Protection

The breaker between the Freedom SW AC output and the AC loads must be rated to protect the AC output wire size used. If the AC output wiring is based on the full 30-amp pass-through rating, then a 30-amp output breaker is acceptable. If the AC output wiring is smaller, then the breaker size will have to be smaller as well, in accordance with applicable electrical installation codes.

GFCI Requirements

A GFCI (ground fault circuit interrupter) is a device that de energizes a circuit when a current to ground exceeds a specified value that is less than that required to open the circuit breaker. GFCIs are intended to protect people from electric shocks and are usually required in wet or damp locations.

Installation in recreational vehicles requires GFCI protection of certain branch circuits. Consult all applicable codes.

Freedom SW 3K2K InvChg Install Guide.book Page 13 Wednesday, October 9, 2013 1:32 PM

Tested GFCIs

Compliance with UL standards requires that the manufacturer test and recommend specific GFCIs for use on the output of the inverter. Table 1 lists models that have been tested and will function properly when connected to the AC output of the Freedom SW.

Table 1 Tested GFCI Models

Manufacturer	Model Number
Hubbell	GFR5252WA
Leviton	8599-GY
Pass & Seymour	1594-W

Disconnect Devices

Each system requires a method of disconnecting the AC circuits. If the overcurrent protection device is a circuit breaker, it will also serve as the disconnect. If fuses are used, separate AC disconnect switches will be needed between the source and the fuses.

Distribution Panels

Some systems incorporate distribution panels both ahead of the inverter/charger (the AC source panel) and between the inverter/charger and the loads (the AC load panel). The AC source panel includes a main circuit breaker, which serves as overcurrent protection for the panel. Additional circuit breakers serve individual circuits, one of which serves the inverter/charger.

AC Wiring

Definition AC wiring includes input wiring (all the wires and connectors between the AC source and the inverter/charger input) and output wiring (all the wires between the inverter/charger and the AC load panels, circuit breakers, and loads).

Type The type of wiring required varies according to the electrical codes or regulations applicable to your installation. For RV applications, this may be solid wire in multi-conductor cables, but stranded wire is required if single conductors are used. All wiring must be rated 90 °C or higher.

Size of AC Input Wiring Wire size must be coordinated with the overcurrent protection provided ahead of the wire involved, in accordance with the electrical codes or regulations applicable to your installation.

Therefore, the wiring used between the AC input circuit breaker and the inverter/charger input must be sized to match the input breaker rating.

Table 2 AC Wire Size In and Out of the Inverter/Chargers

MODELS	815-3012 / 815-3024		815-2012 / 815-2024
	Split phase	Dual input	
Breaker Size Used	30 amps per line	30 amps per line	30 amps
Wire Size	No. 10 AWG	No. 6 AWG	No. 10 AWG
Color Coding	**L1**: black: **N**: white **L2**: red **Gnd**: green	**L1**: red or black **N**: white **L2**: red or black **Gnd**: green	**L**: red or black **N**: white **G**: green

For dual input, the wire may be red or black; consult the documentation provided with the AC source (utility or generator).

This guide for use by qualified installers only.

Freedom SW 3K2K InvChg Install Guide.book Page 14 Wednesday, October 9, 2013 1:32 PM

Size of AC Output Wiring Wire size must be coordinated with the current the wiring will carry. This current may be determined by the 25-amp (Freedom SW 3012) and 20-amp (Freedom SW 2012) maximum inverter current, or by the bypass current, which is determined by the overcurrent protection provided ahead of the Freedom SW.

Some conditions for Freedom SW:

- If the input wiring is split-phase, the output wiring must be sized to coordinate with the breakers used on the input. Refer to your applicable installation codes.
- If the input wiring is dual-input and the output wiring is single-input, the following rules apply: If the input breaker on L1 is greater than 25 amps, the wire size must be coordinated for that amperage. If the input breaker on L1 is less than 25 amps, the wire size must be coordinated for 25 amps. The wire size must not be sized for anything lower than 25 amps.
- If both the input and the output wiring are dual-input, the output wiring for each line (L1 and L2) must be calculated separately, following these rules: If the input breaker on the specific line is greater than 25 amps, the wire size for that line and its neutral must be coordinated for that amperage. If the input breaker on the specific line is less than 25 amps, the wire size for that line and its neutral must be coordinated for 25 amps. The wire size must not be sized for anything lower than 25 amps.

Size of Wiring Downstream of the AC Output Breaker The wiring used between the AC output breaker and your loads must be sized to match the output breaker.

Freedom SW 3K2K InvChg Install Guide.book Page 15 Wednesday, October 9, 2013 1:32 PM

AC Output Neutral Bonding

The AC source must have its neutral conductor bonded to ground.

Bonding system The Freedom SW provides a system that automatically connects the neutral conductor of the inverter's AC output circuit to safety ground ("bonding" it) while the inverter/charger is inverting, and disconnects it ("unbonding" it) when the inverter/charger is connected to external AC power. This system is designed to conform to installation codes that require AC sources such as inverters and generators to have their neutral conductors tied to ground at the source of power in the same way that the neutral conductor from the utility is tied to ground. These same codes specify that the neutral can only be connected to ground in one place at any one time.

Suitability This automatic neutral-to-ground bonding system requires AC input sources with bonded neutral. This will be the case in most situations: in a utility feed, at an external AC hook-up, or a generator with a bonded neutral. If not, have an electrician look into bonding the source's neutral to ground. See also "AC Input and Output Isolation" on page 27.

This guide for use by qualified installers only.

Freedom SW 3K2K InvChg Install Guide.book Page 16 Wednesday, October 9, 2013 1:32 PM

DC Components

Batteries

The Freedom SW system requires a 12- or 24-volt (depending on the model), lead-acid deep-cycle battery or group of batteries to provide the DC current that the inverter/charger converts to AC power. The battery may be a flooded, gel, or AGM type.

See “Battery Information” on page 55 for information on:

- Estimating the battery size that will meet your requirements.
- Designing battery banks.
- Restrictions on the size of appliances.

For information on cabling and hooking up batteries, see “Battery Cabling and Hook-up Configurations” on page 59.

For detailed information about specific brands of batteries, consult individual battery manufacturers.

DC Cabling

Definition DC cabling includes all of the cables and connectors between the batteries, the DC disconnect and overcurrent protection device, and the inverter/charger.

Type All installations require multi-strand insulated cables. The DC cables must be copper and must be rated 75°C minimum.

Size and Length See Table 3 for required DC cable length, cable size and required fuse size for the Freedom SW. Wire size is usually marked on the cables.

Table 3 Minimum Recommended Battery Cable Sizes for Copper Conductors Rated 75C

		Conduit	Free Air
Model	**Typical Amps (A)**	**Cable Length < 10 ft.**	**Cable Length < 5 ft.**
Freedom SW 2012	250	250 kcmil	2/0 AWG
Freedom SW 3012	320	400 kcmil	4/0 AWG
Freedom SW 2024	120	1 AWG	4 AWG
Freedom SW 3024	180	3/0 AWG	1 AWG

IMPORTANT: Longer cables may cause the inverter to shut down under a heavy load.

⚠ WARNING

FIRE HAZARD

Undersized cables will overheat. Consult local electrical codes to determine minimum required size.

Failure to follow these instructions can result in death or serious injury.

Freedom SW 3K2K InvChg Install Guide.book Page 17 Wednesday, October 9, 2013 1:32 PM

DC Disconnects and Over-Current Devices

The DC circuit from the battery to the inverter/charger must be equipped with a disconnect and overcurrent protection device. Refer to your applicable installation code for guidance.

Type This device usually consists of a circuit breaker, a "fused-disconnect," or a separate fuse and DC disconnect. Do not confuse AC circuit breakers with DC circuit breakers. They are not interchangeable.
Rating The rating of the fuse or breaker must be matched to the size of cables used in accordance with the applicable installation codes.
Location The breaker or fuse and disconnect should be located as close as possible to the battery in the positive cable. Applicable codes may limit how far the protection can be from the battery.

Table 4 Recommended Fuse Sizes[a]

Model	Minimum Fuse Size (A)
Freedom SW 2012	275
Freedom SW 3012	350
Freedom SW 2024	150
Freedom SW 3024	200

a. Based on National Electrical Code (NEC) requirements. The NEC requires that the cables be protected by a fuse or breaker rated to match the cables' ampacity at 75 °C.

Marine Applications[1] A charger needs to be equipped with a disconnect and an over-current protection device, usually within seven inches (18 cm) of each battery's positive terminal and another over-current protection device seven inches (18 cm) near the charger's positive terminal.

1.Per ABYC E-11.

DC Grounding

Recreational Vehicles The inverter/charger DC (chassis) ground terminal needs to be connected to the vehicle chassis by a minimum No. 8 AWG copper conductor that is either insulated (green) wire rated 75 °C or bare copper.

Marine Applications[2] The DC grounding conductor may be one size smaller than the minimum size conductor required for the DC current carrying conductors providing the overcurrent protection device in the DC positive conductor is rated no greater than 135% of the ampacity of the DC grounding conductor and the conductor is no smaller than 16 AWG.

2.Per ABYC A-31.

This guide for use by qualified installers only.

Freedom SW 3K2K InvChg Install Guide.book Page 18 Wednesday, October 9, 2013 1:32 PM

Unpacking and Inspecting the Freedom SW Inverter/Charger

⚠ CAUTION

HEAVY ITEM

The Freedom SW Inverter/Charger is heavy (see “Inverter/Charger Physical Specifications” on page 54). The unit is too heavy for one person to safely lift and mount. It is recommended that two people lift and mount the unit. Always use proper lifting techniques during installation to prevent personal injury.

Failure to follow these instructions can result in minor or moderate injury.

To unpack and inspect:

IMPORTANT: Keep the carton and packing material in case you need to return the Freedom SW for servicing.

1. Unpack the unit and check the materials list. If anything is missing from the shipping box, contact Customer Service. See “Contact Information” on page i.
2. Record the serial number of the Freedom SW and other purchase information for any future warranty issues. You will be asked for this product information if you need to call Customer Service.
3. Save your purchase receipt to use as proof-of-purchase. This receipt is required if the inverter/charger should need warranty service.
4. Save the original shipping carton and packing materials. If the inverter/charger needs to be returned for service, it should be shipped in the original carton. Packing the Freedom SW in the original shipping carton is also a good way to protect the inverter/charger if it ever needs to be moved.

Freedom SW 3K2K InvChg Install Guide.book Page 19 Wednesday, October 9, 2013 1:32 PM

Installation Tools and Materials

Tools

You will need the following tools to install the Freedom SW and the battery temperature sensor.

- ❒ Wire stripper
- ❒ Crimping tools for fastening lugs and terminals on DC cables
- ❒ Phillips screwdriver: #2
- ❒ Slot screwdriver (¼" wide blade max.)
- ❒ Needle-nose pliers
- ❒ Wrench for DC terminals: 9/16"

Materials

You will need the following materials to complete your installation:

- ❒ Strain-relief clamp(s) for AC cables (not provided): 3/4" and/or 1"
- ❒ DC battery cables
- ❒ Lugs for DC cables (for 3/8" stud size)
- ❒ Copper wire for DC grounding: No. 8 AWG. See “DC Grounding” on page 17
- ❒ Lugs for DC grounding cable (for 1/4" stud size)
- ❒ AC and DC disconnect switches and overcurrent protective devices and connectors as required. See page 16.
- ❒ AC output and input wire. See Figure 3 on page 8.
- ❒ If the AC ground wire is stranded, each ground wire requires a ring terminal
- ❒ Six 1/4"–20 1.25" length steel screws or bolts to mount the unit
- ❒ Inverter drip shield (PN: 808-9004) if mounting in UL458-compliant marine installation

NOTE: For a list of tools and materials required to install the network, refer to the *Xanbus System Installation Guide,* which is available for download at **www.xantrex.com**.

This guide for use by qualified installers only.

Installing the Inverter/Charger

Overview

This section provides detailed information on installing the Freedom SW.
The overall procedure is divided into eight steps:

Step 1: Choosing a Location for the Inverter/Charger on page 21,

Step 2: Mounting the Inverter/Charger on page 23,

Step 3: Connecting the AC Input and AC Output Wires on page 27,

Step 4: Connecting the DC Cables on page 31,

Step 5: Connecting the Battery Temperature Sensor (BTS) on page 36,

Step 6: Connecting to the Network on page 40,

Step 7: Performing Checks Prior to Initial Start-Up on page 41, and

Step 8: Testing Your Installation on page 42.

Freedom SW 3K2K InvChg Install Guide.book Page 21 Wednesday, October 9, 2013 1:32 PM

Step 1: Choosing a Location for the Inverter/Charger

⚠ DANGER

FIRE AND EXPLOSION HAZARD

This equipment contains components that could produce arcs or sparks. To reduce the risk of fire or explosion, do not install this equipment in compartments containing batteries or flammable materials, or in locations that require ignition-protected equipment. This includes any space containing gasoline-powered machinery, fuel tanks, or joints, fittings, or other connections between components of the fuel system.

Failure to follow these instructions will result in death or serious injury.

⚠ CAUTION

HEAT HAZARD

Do not cover or obstruct the ventilation openings. Do not install this equipment in a compartment with limited airflow. Overheating may result.

Failure to follow these instructions can result in minor or moderate injury.

The inverter should only be installed in a location that meets the following requirements:

Ventilated — Do not operate the inverter/charger in a closed-in area or restrict ventilation in any way. The inverter/charger requires air circulation to maintain optimum operating temperature and provide best performance. If the unit has inadequate ventilation, it may shut down due to overheating.
The air vented through the openings should also have a path to circulate away from the inverter/charger.

Dry — Do not allow water or other fluids to drip or splash on the inverter/charger. Do not expose to rain, snow or water.
Use inverter drip shield (PN: 808-9004) for UL458-compliant marine installations.

Cool — Normal air temperature should be between 32 °F and 140 °F (0 °C and 60 °C)—the cooler the better within this range.

Clearance — Allow as much space around the inverter/charger as possible. It is recommended that other objects and surfaces be at least 3 inches (76 mm) away from the ventilation openings for best performance.

This guide for use by qualified installers only.

Safe	Locate the inverter/charger away from battery in a separate well ventilated compartment. Do not install the inverter/charger in any compartment containing flammable gases or liquids like gasoline.
Close to battery compartment	The length and size of your DC cables will affect performance. Use the DC cables recommended in Table 3 on page 16. The unit should **not** be installed in the battery compartment due to the possible presence of explosive hydrogen gas from the batteries.
Protected from battery acid and gases	Never place the inverter/charger directly above the batteries—gases from battery will corrode and damage the inverter/charger. If the inverter/charger is installed in a compartment above the batteries, make sure there is a solid, gas-impermeable wall dividing the two compartments. Never allow battery acid to drip on the inverter/charger or its wiring when filling the batteries or reading their specific gravity.
Orientation	To meet regulatory requirements, the Freedom SW must be mounted in one of the approved mounting orientations. See Figure 6 on page 24.

Freedom SW 3K2K InvChg Install Guide.book Page 23 Wednesday, October 9, 2013 1:32 PM

Step 2: Mounting the Inverter/Charger

Considerations

Before mounting the Freedom SW, take the following two factors into account.

1. The weight of the inverter/charger requires two people to install it.
2. Mounting considerations are shown in Figure 6 on page 24.

> ⚠ CAUTION
>
> **HEAVY ITEM**
>
> The Freedom SW Inverter/Charger is heavy (see “Inverter/Charger Physical Specifications” on page 54). The unit is too heavy for one person to install safely. It is recommended that two people lift and mount the unit. Always use proper lifting techniques during installation to prevent personal injury.
>
> **Failure to follow these instructions can result in minor or moderate injury.**

The Freedom SW dimensions and location of the mounting holes are provided in Figure 6 on page 24.

Mount your inverter/charger before you connect any wires or cables.

To mount the inverter/charger:

1. Remove the inverter/charger from its shipping container.
2. Verify that all components are present.
3. Select an appropriate mounting location and orientation. To meet regulatory requirements, the Freedom SW must be mounted in one of the orientations shown in Figure 6 on page 24.
4. Mark the position of the mounting holes.
5. Pilot drill the six mounting holes.
6. Fasten the inverter/charger to the mounting surface with six 1/4"–20 steel screws or bolts.

This guide for use by qualified installers only.

Freedom SW 3K2K InvChg Install Guide.book Page 24 Wednesday, October 9, 2013 1:32 PM

Figure 6 Mounting Orientations

Orientation	Approved Mounting Orientation?	Comment
Desktop Mount 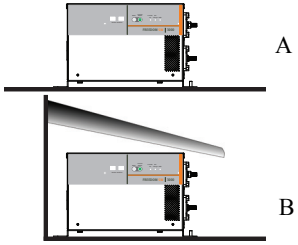 A	A - Yes	A - Suitable only for non-marine applications with no risk of condensation or dripping water.
B	B - Yes when used with inverter drip shield (PN: 808-9004) for UL458-compliant marine installations.	B - The drip shield is installed on top of the inverter with some clearance. See “Drip Shield Placement (Desktop Mount)” on page 65.
Upside-down Mount 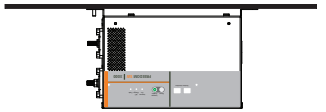	Yes (for non-marine applications only)	Suitable only for non-marine applications with no risk of condensation or dripping water.
Wall Mount DC on Left 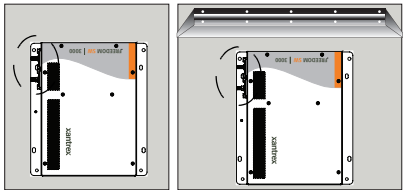 A B	A - Yes	A - On a vertical surface with DC terminals facing left.
	B - Yes when used with inverter drip shield (PN: 808-9004) for UL458-compliant marine installations.	B - On a vertical surface with DC terminals facing left with the front panel facing up. The drip shield is installed on top of the inverter with some clearance. See “Drip Shield Placement (Inverter Front Panel Facing Up)” on page 66.

Freedom SW 3K2K InvChg Install Guide.book Page 25 Wednesday, October 9, 2013 1:32 PM

Orientation	Approved Mounting Orientation?	Comment
Wall Mount DC on Right 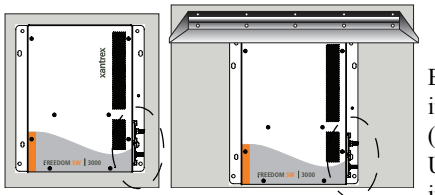 A B	A - Yes B - Yes when used with an inverter drip shield (PN: 808-9004) for UL458-compliant marine installations.	A - On a vertical surface with DC terminals facing left. B - On a vertical surface with DC terminals facing right with the front panel facing down. The drip shield is installed directly on top of the inverter. See “Drip Shield Placement (Inverter Front Panel Facing Down)” on page 66.

This guide for use by qualified installers only.

Freedom SW 3K2K InvChg Install Guide.book Page 26 Wednesday, October 9, 2013 1:32 PM

Orientation	Approved Mounting Orientation?	Comment
Wall Mount DC Up 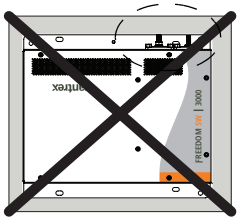	No	Not acceptable. This orientation does not meet regulatory requirements.
Wall Mount DC Down 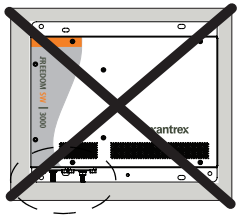	No	Not acceptable. This orientation does not meet regulatory requirements.

Freedom SW 3K2K InvChg Install Guide.book Page 27 Wednesday, October 9, 2013 1:32 PM

Step 3: Connecting the AC Input and AC Output Wires

⚠ DANGER

FIRE, ELECTRICAL SHOCK, AND ENERGY HAZARDS

Make sure wiring being connected to the inverter/charger is de-energized by a breaker or switch upstream. Lockout/Tagout is a recommended practice by many electrical contractors. Always lockout and tag disconnect devices before making connections. All wiring must be done in accordance with local and national electrical wiring codes.

Failure to follow these instructions will result in death or serious injury.

General AC Wiring Considerations

AC and DC Wiring Separation Do not mix AC and DC wiring in the same conduit or panel. Consult the applicable installation code for details about DC wiring and AC wiring in vicinity to each other.

AC Input and Output Isolation The AC input and output circuits of this inverter/charger are isolated from each other when in invert mode to ensure safe operation. This isolation must be maintained in the installation, by being sure not to connect AC input and output wiring to a common point. For example, do not route the AC input and output neutrals to a common neutral bus. It is highly recommended to use a separate inverter load panel to distribute power to inverter loads. All wiring to this panel must be through the inverter/charger and none to the main panel upstream of the inverter/charger.

IMPORTANT: wiring the output inverter to back to the main panel could result in ground bonding to occur in multiple locations in contravention of applicable wiring codes and may result in nuisance tripping of Ground fault protection equipment. All wiring must be performed by a qualified electrician.

AC Wiring Compartment For your reference, the AC wiring compartment is shown in Figure 7 on page 28.

AC Knockouts There are two dual 1.0"/ 3/4" trade-size knockouts on the side panel for AC wiring. Use the same trade size of strain relief as the trade size of the knockout(s) you are using.

AC Wiring Terminals The AC wiring terminals accept cables of a specific size. See “AC Wiring” on page 13 for required sizes.

This guide for use by qualified installers only.

Freedom SW 3K2K InvChg Install Guide.book Page 28 Wednesday, October 9, 2013 1:32 PM

Connecting AC Input Wires

Figure 7 shows the wiring compartment, which contains a grounding bus (used to wire the AC input and output ground wires) and a terminal block (used to wire the AC input and AC output connections).

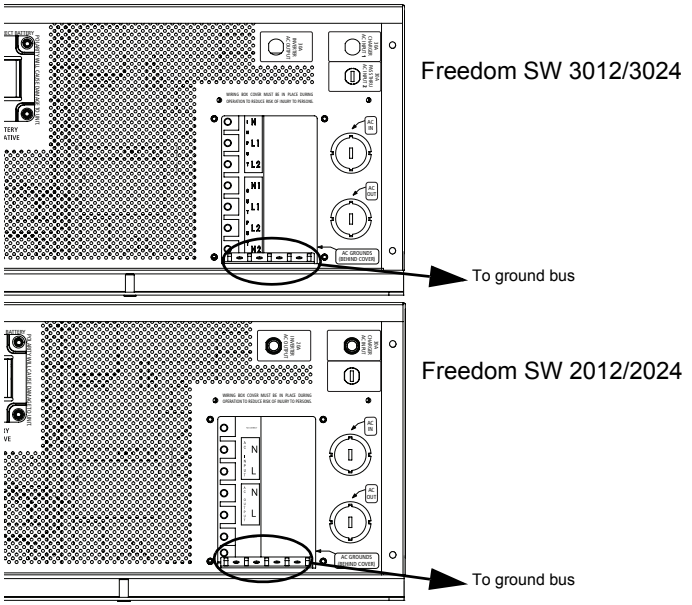

Figure 7 AC Wiring Compartment

CAUTION
EQUIPMENT DAMAGE The terminal block is split into INPUT and OUTPUT sections. Damage may occur if the unit is wired incorrectly. Do not remove or loosen factory installed wiring. **Failure to follow these instructions can damage the unit and/or damage other equipment.**

When making the AC input and AC output connections, observe the correct color code for the appropriate AC wire, as described in Table 2 on page 13.

To make the AC input connections:

1. Locate the wiring compartment cover panel and remove the four screws.
2. Remove the cover panel from the unit to access the wiring compartment.
3. Remove one of the AC knockouts from the front or side of the unit. Do not leave the knockout inside the wiring compartment.
4. Install a strain-relief clamp in the AC knockout.
5. Run the AC wiring through the strain-relief clamp.
6. Strip approximately 2 inches (50 mm) off the jacket from the AC cable and separate the wires.
7. Using a 1/4" blade slot screwdriver, loosen the terminal screws on the terminals. Do not remove the screws.

Freedom SW 3K2K InvChg Install Guide.book Page 29 Wednesday, October 9, 2013 1:32 PM

8. Connect the line and neutral wires to the input terminals (labeled AC Input on the terminal block, Figure 7 on page 28).

   Freedom SW 3012/3024:
   Connect Line 1 to **L1**, Neutral to **N**, Line 2 to **L2**.

   Freedom SW 2012/2024:
   Connect Line to **L**, Neutral to **N**, Ground to **G**.
9. Tighten the terminal screws. Leave some slack wire inside the wiring box.
10. Connect the ground wires to a free position on the ground bus, Figure 7 on page 28. If solid ground wire is being used, the wire can be connected directly under the screw heads. If stranded ground wire is being used, ring terminals must also be used.
11. Secure the strain-relief clamp on the AC input cable jacket.

This guide for use by qualified installers only.

Freedom SW 3K2K InvChg Install Guide.book Page 30 Wednesday, October 9, 2013 1:32 PM

Connecting the AC Output Wires

CAUTION

EQUIPMENT DAMAGE

Do not connect the output of the inverter to any AC source.

Failure to follow these instructions can damage the unit and/or damage other equipment.

To make the AC output wiring connections:

1. Remove one of the AC knockouts from the front or side of the unit. Do not leave the knockout inside the wiring compartment.

IMPORTANT: The applicable installation code may not allow you to run the AC input and AC output wiring through the same AC knockout.

2. Install a strain-relief clamp in the AC knockout and run the AC wiring through the strain-relief clamp.
3. Strip approximately 2 inches (50 mm) off the jacket from the AC cable and separate the wires.
4. Using a 1/4" blade slot screwdriver, loosen the terminal screws on the AC output terminals. Do not remove the screws.
5. Connect the line and neutral wires to the output terminals (labeled AC Output on the terminal block, Figure 7 on page 28) as follows:

Freedom SW 3012/3024 Terminals	Line for Dual Output	Lines for Single Output
N2	Neutral 2	Unused
L2	Line 2	Unused
N1	Neutral 1	Neutral
L1	Line 1	Line

Freedom SW 2012/2024 Terminals	Lines for Output
N	Neutral
L	Line

6. Tighten the terminal screws. Leave some slack wire inside the wiring box.
7. Connect the ground wires to a free position on the ground bus, Figure 7 on page 28. If solid ground wire is being used, the wire can be connected directly under the screw heads. If stranded ground wire is being used, ring terminals must also be used.
8. Secure the strain-relief clamp on the AC output cable jacket.
9. Attach the wiring compartment cover panel and tighten the four screws.
10. Connect the outgoing AC wires to an AC load panel equipped with circuit breakers.

Freedom SW 3K2K InvChg Install Guide.book Page 31 Wednesday, October 9, 2013 1:32 PM

Step 4: Connecting the DC Cables

DC Connection Precautions

⚠ DANGER

ELECTRICAL SHOCK HAZARD

Connect and disconnect DC wiring only after opening the disconnect switches or breakers at all AC and DC sources.

Failure to follow these instructions will result in death or serious injury.

Recommended Cable Sizes and Lengths and Fuse Size

For recommended DC cables and fuse sizes, see Table 3 and Table 4 on page 17.

Preparing the Cables

To prepare the DC cables:

1. Cut the negative and positive cables to the required length. Strip off enough insulation so you can install the terminals you will be using.

   It is recommended the use of crimp connectors. The connector should be designed for a 3/8" stud size to connect to the Freedom SW. If a crimp connector is used, it should be crimped using the tool indicated by the connector manufacturer.

2. Cut the DC ground cable to the required length. Strip off enough insulation so you can install the terminals you will be using.

   It is recommended the use of crimp connectors. The connector should be designed for a 1/4" stud size to connect to the Freedom SW. If a crimp connector is used, it should be crimped using the tool indicated by the connector manufacturer.

3. Attach the connectors to the ends of both cables. Make sure no stray wire strands protrude from the connectors.

This guide for use by qualified installers only.

Freedom SW 3K2K InvChg Install Guide.book Page 32 Wednesday, October 9, 2013 1:32 PM

Guidelines for Routing the DC Cables

Follow these guidelines to ensure maximum performance.

⚠ WARNING

ELECTRICAL SHOCK AND FIRE HAZARD

Route the cables away from sharp edges that might damage the insulation. Avoid sharp bends in the cable.

Failure to follow these instructions can result in minor or moderate injury.

- Do not attempt to use the chassis in place of the battery negative connection for grounding. The inverter requires a reliable return path directly to the battery.
- To reduce the chance of radio frequency interference, keep the positive and negative cables close together—ideally, held together by straps, loom, or insulated clamps at regular intervals.
- To ensure maximum performance from the inverter/charger, do not route your DC cables through a DC distribution panel, battery isolator, or other device that will cause additional voltage drops. The exception is the DC fuse and Disconnect or the DC circuit breaker which is required at the battery to protect the DC wiring.
- To help avoid damage caused by reverse polarity battery connection, it is a good idea to mark each end of each cable to identify it as a positive (red) or negative (black) cable before routing the wiring.

Freedom SW 3K2K InvChg Install Guide.book Page 33 Wednesday, October 9, 2013 1:32 PM

Connecting the DC Cables to the Inverter/Charger

⚠ WARNING

FIRE HAZARD

Use only appropriately sized copper cable. Loose connections, improper connections, and under-rated cables will overheat. Make sure that the supplied bolts on the inverter/charger are tightened to a torque of 15–16 ft-lbs (20.4–21.7 Nm). Torque all other connections to the manufacturer's specifications. Make sure the DC cable, washers, and bolt are assembled in the order shown in Figure 8.

Failure to follow these instructions can result in death or serious injury.

CAUTION

EQUIPMENT DAMAGE DUE TO REVERSE POLARITY

Before making the final DC connection or closing the DC breaker or disconnect, check cable polarity at both the battery and the inverter/charger. Positive (+) must be connected to positive (+). Negative (–) must be connected to negative (–).

Failure to follow these instructions can damage the unit and/or damage other equipment.

To connect the DC cables:

1. Route the DC cables from the battery bank to the inverter/charger. Observe the "Guidelines for Routing the DC Cables" on page 32.
2. Install a DC fuse and disconnect switch or a DC circuit breaker between the inverter/charger and the battery. It must be installed in the positive side of the DC circuit, as close as possible to the battery.

   This protects your battery and wiring in case of accidental shorting. See Table 4 on page 17 for required fuse or breaker size.
3. Open the DC disconnect switch or turn off the DC circuit breaker.
4. Connect one connector on the POSITIVE (+) cable to the POSITIVE DC terminal on the inverter/charger, as shown in Figure 8. The connector goes on first, then the flat washer (steel), lock washer (steel), and 3/8" bolt (brass).
5. Connect the other connector to the POSITIVE (+) terminal on the fuse or breaker. Observe polarity carefully while completing the installation.

   Use a wrench to tighten the bolt to a torque of 15–16 ft-lbs (20.4–21.7 Nm) at the inverter/charger end. Observe the fuse holder or breaker manufacturer's recommendation at the other end.
6. Connect one connector on the NEGATIVE (–) cable to the NEGATIVE (–) DC terminal on the inverter/charger, as shown in Figure 8. The connector goes on first, then the flat washer (steel), lock washer (steel), and 3/8" bolt (brass).

This guide for use by qualified installers only.

Freedom SW 3K2K InvChg Install Guide.book Page 34 Wednesday, October 9, 2013 1:32 PM

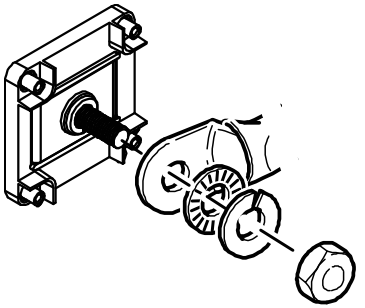

Figure 8 DC Cable Connections

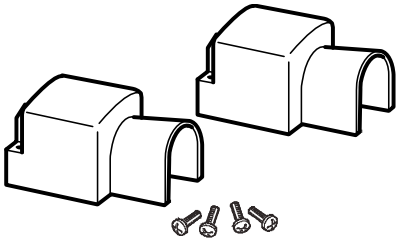

Figure 9 DC Terminal Covers

7. Before proceeding, check that the cable polarity is correct: POSITIVE (+) on the inverter/charger is connected to the POSITIVE (+) on the battery, and NEGATIVE (–) cable is connected to the NEGATIVE (–) terminal on the inverter/charger.

IMPORTANT: The next step is the last cable connection you need to make. A spark is normal when the DC disconnect switch is turned on or the DC circuit breaker is closed so be sure step #3 is done before proceeding.

8. Connect the other end of the cable to the NEGATIVE (–) terminal on the battery.
9. Use a wrench to tighten the bolt to a torque of 15–16 ft-lbs (20.4–21.7 Nm) at the inverter/charger end.
10. To protect the DC terminals, attach the DC terminal covers (Figure 9) to the inverter/charger, using the screws provided.

Freedom SW 3K2K InvChg Install Guide.book Page 35 Wednesday, October 9, 2013 1:32 PM

DC Grounding

The Chassis Ground point on the inverter/charger is used to connect the chassis of the inverter/charger to your system's DC grounding point, as required by regulations for some installations. Use copper wire that is either bare or provided with green insulation.

The grounding guideline given below assumes you are using the code-compliant DC supply cable and fuse sizes indicated on page 16. If you are using different sizes, refer to the applicable code for DC grounding detail.

To connect the chassis ground:

1. Using the appropriate wrench, loosen the bolt on the chassis ground point shown in Figure 10.
2. Connect the grounding cable between the chassis ground point and the DC grounding point for your system.

   In an RV or vehicle installation, the DC grounding point will usually be the vehicle chassis or a dedicated chassis ground bus.
3. Tighten the screw to a torque of 1.0–1.25 ft-lbs (1.47–1.7 Nm).

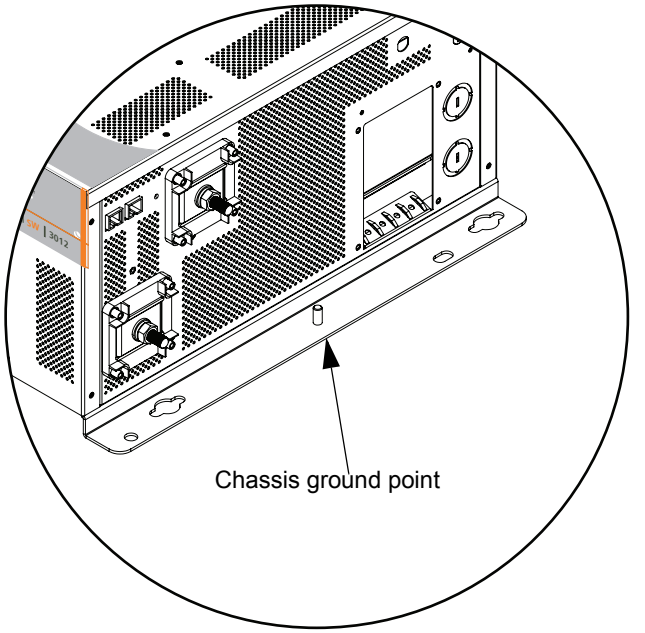

Figure 10 DC Wiring and DC Grounding

This guide for use by qualified installers only.

Freedom SW 3K2K InvChg Install Guide.book Page 36 Wednesday, October 9, 2013 1:32 PM

Step 5: Connecting the Battery Temperature Sensor (BTS)

Installing a battery temperature sensor (BTS) extends the life of a battery by preventing overcharging in warm temperatures and undercharging in cold temperatures. With a BTS monitoring the battery temperature, the voltage delivered to the battery is adjusted according to the battery's actual temperature.

The BTS has a self-adhesive backing and attaches to the side of the battery. A 25-foot (7.6 m) cable is supplied with the BTS.

Mounting Options

You can mount the BTS in one of two ways:

- Mounting the sensor to the negative battery post allows the internal battery temperature to be sensed and provides the most accurate results.
- Attaching the sensor to the side of the battery using the self-adhesive backing also provides good results in most situations.

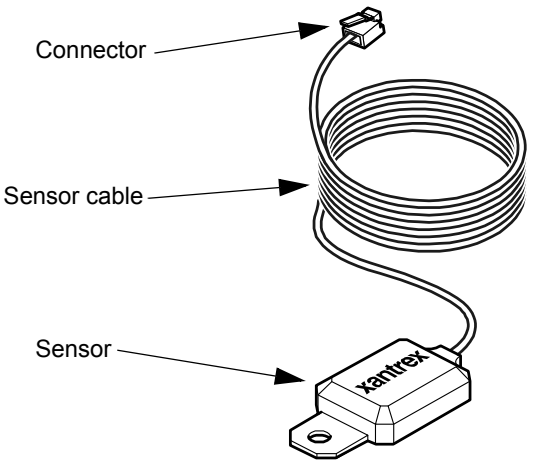

Figure 11 BTS with Cable

To order a spare BTS, call customer service and order part number 809-0946.

Freedom SW 3K2K InvChg Install Guide.book Page 37 Wednesday, October 9, 2013 1:32 PM

Mounting to the Negative Battery Terminal

To mount the sensor on the negative battery terminal:

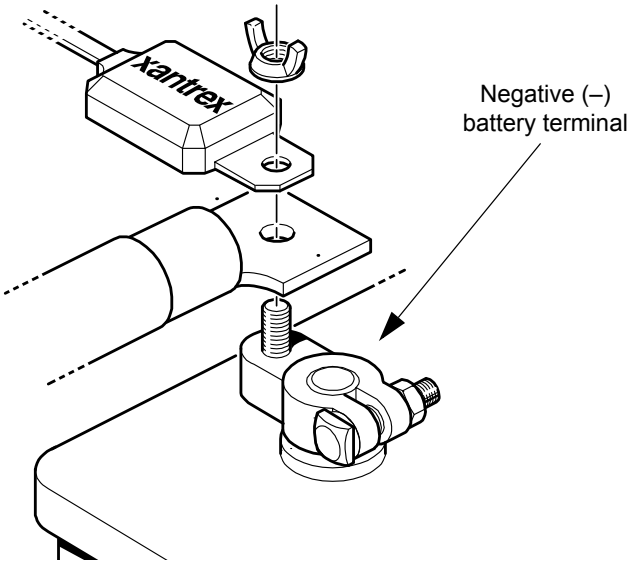

Figure 12 BTS Mounted on the Negative Battery Terminal

1. Select the battery to be monitored. The BTS should be connected to the battery bank that is directly connected to the inverter/charger.
2. Switch off all devices operating from the battery, or open the battery switch (if present) to disconnect the battery.
3. Wait 10 minutes for any explosive battery gases to dissipate.
4. Remove the nut that connects existing wiring ring terminals to the battery negative terminal stud.
5. Move or reorient the existing wiring ring terminals on the battery negative terminal stud, so there is a flat surface on which to seat the BTS mounting plate.

   You may need to bend the ring terminal crimp and/or wires slightly downward to allow the sensor to seat flush to the top surface of the upper ring terminal.
6. Mount the sensor directly on top of the ring terminal, as shown in Figure 12, and firmly tighten the terminal nut.

> ⚠ WARNING
>
> **FIRE HAZARD**
>
> In this procedure, you must install the DC wire on the battery terminal, then install the sensor on top of the DC wire. This sequence is required to provide the best connection to the battery and to ensure correct performance of the sensor.
>
> **Failure to follow these instructions can result in death or serious injury.**

7. Check to ensure that the sensor and all wires are held firmly and cannot be moved.
8. Turn the battery switch on again (if you opened it in Step 2.)

This guide for use by qualified installers only.

Freedom SW 3K2K InvChg Install Guide.book Page 38 Wednesday, October 9, 2013 1:32 PM

9. Route the sensor cable to the inverter/charger and plug it into the blue BTS port, as shown in Figure 13. Secure the cable along its length.

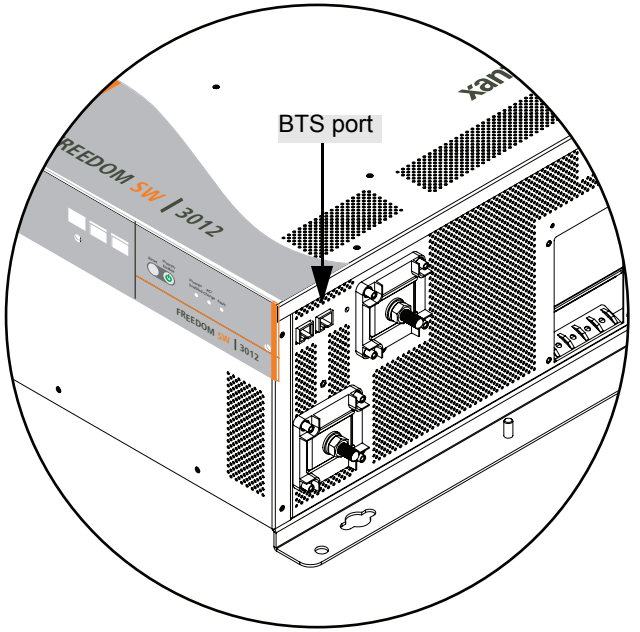

Figure 13 Connecting the BTS Cable to BTS Port

Freedom SW 3K2K InvChg Install Guide.book Page 39 Wednesday, October 9, 2013 1:32 PM

Mounting to the Side of the Battery Case

To mount the sensor on the battery case:

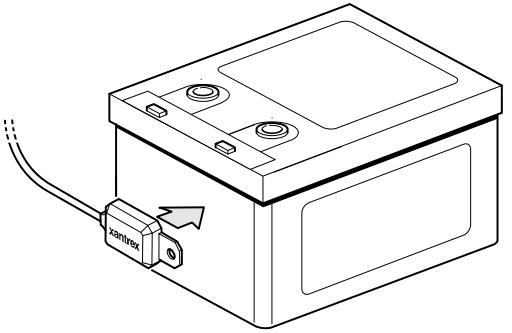

Figure 14 BTS Mounted on the Battery Case

1. Select the battery to be monitored.

   The BTS should be connected to the battery bank that is directly connected to the inverter/charger.

2. Select a side suitable for attaching the sensor.

   The surface where the sensor is to be mounted must be flat and free from reinforcing ribs or other raised features. This surface must be in direct internal contact with the battery electrolyte. Do not install the sensor near the top of the battery or on the battery's top surface.

3. Clean the selected area thoroughly to remove any oil or grease that could prevent the sensor from adhering to the battery case. Allow the battery case to dry thoroughly.
4. Peel the protective backing from the self-adhesive strip on the rear of the sensor.
5. Press the sensor firmly against the clean side of the battery to fix it in place, as shown in Figure 14.
6. Route the sensor cable to the inverter/charger and plug it into the Battery Temp. jack, as shown in Figure 13. Secure the cable along its length.

This guide for use by qualified installers only.

Freedom SW 3K2K InvChg Install Guide.book Page 40 Wednesday, October 9, 2013 1:32 PM

Step 6: Connecting to the Network

For your reference, Figure 15 shows where the network connections are made on the Freedom SW.

To connect the Freedom SW to the Xanbus network:

- Plug a network cable connected to the Xanbus network into either one of the two Xanbus Interface network ports on the Freedom SW.

CAUTION
EQUIPMENT DAMAGE Connect the Freedom SW only to other Xanbus compatible devices. Although the cabling and connectors used in this network system are the same as Ethernet connectors, **this network is not an Ethernet system**. Equipment damage may result from attempting to connect two different systems. Do not attach the Freedom SW On/Off switch to these ports. **Failure to follow these instructions can damage the unit and/or damage other equipment.**

Detailed information on planning and installing your network is available in the *Xanbus System Installation Guide.* Refer to the this guide to determine the type of network layout to install, as well as guidelines for installing the network.

The Xanbus System Installation Guide is available for download at **www. xantrex.com**

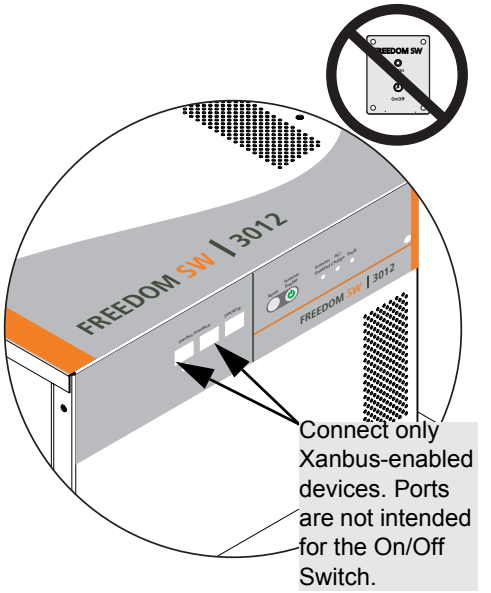

Figure 15 Connecting to a Xanbus Network Port

Freedom SW 3K2K InvChg Install Guide.book Page 41 Wednesday, October 9, 2013 1:32 PM

Step 7: Performing Checks Prior to Initial Start-Up

Before testing your installation, ensure these conditions are met:

- ❒ Chassis and AC grounds are properly installed.
- ❒ AC input connections and AC output connections are wired correctly on the terminal block and not reversed.
- ❒ Positive (+) battery cable is connected to the positive (+) battery terminal through the DC fuse and disconnect switch or DC circuit breaker.
- ❒ Negative (–) battery cable is connected to the negative (–) battery terminal.
- ❒ Battery voltage is within the proper range for this unit:
  10–16 volts DC for 12-volt models,
  20–32 volts DC for 24-volt models.
- ❒ DC disconnect switch or breaker is turned off.
- ❒ AC input and output breakers are turned off.
- ❒ All connections are tight.

This guide for use by qualified installers only.

Freedom SW 3K2K InvChg Install Guide.book Page 42 Wednesday, October 9, 2013 1:32 PM

Step 8: Testing Your Installation

⚠ WARNING

ELECTRICAL SHOCK HAZARD

The Inverter Enable button on the Freedom SW and the optional accessories do not disconnect DC or AC input power to the Freedom SW.

Failure to follow these instructions can result in death or serious injury.

There are several tests to be performed for testing your installation. These tests will verify that:

- the Freedom SW works in invert mode,
- the Freedom SW works in charge mode, and
- the Freedom SW works in AC bypass mode.

If the test fails at any point, go to “Step 7: Performing Checks Prior to Initial Start-Up” on page 41 and go through the checklist again to check the installation. Then perform the test again. If the test fails again, see the troubleshooting section in the Freedom SW Sine Wave Inverter/Charger Owner’s Guide.

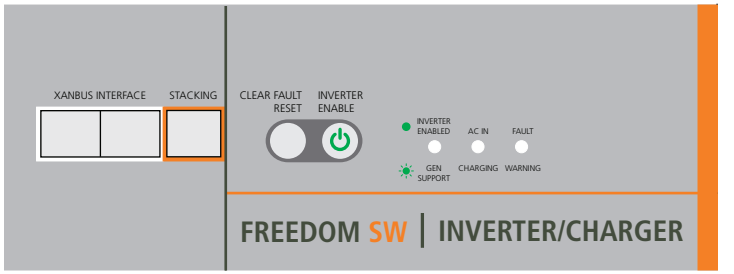

Figure 16 Freedom SW Front Panel

Testing in Invert Mode

To test the Freedom SW in invert mode, using a 100 watt light bulb as the test load:

1. Close the DC disconnect switch or the DC circuit breaker to supply DC power to the Freedom SW.

   Wait for all the lights on the front panel to flash on and off, indicating that the unit has successfully initialized (10 to 30 seconds).

   If the light does not come on, make sure the voltage at the DC terminals on the Freedom SW is correct, as described in “Step 7: Performing Checks Prior to Initial Start-Up” on page 41.

Freedom SW 3K2K InvChg Install Guide.book Page 43 Wednesday, October 9, 2013 1:32 PM

2. After initialization, observe that none of the lights on the front panel should remain illuminated.
3. Press the Inverter Enable button. Verify that:
   - The Inverter Enable button light illuminates,
   - The Invert On light illuminates.
4. Connect the Freedom SW to the test load by closing the AC breaker that controls the circuit that the test load is connected to.

   If the light bulb illuminates, the Invert mode is working.
5. Press the Inverter Enable button to disable the inverter.

   The Invert On light and Inverter Enable button light are off.

Testing in Charge Mode and AC Bypass Mode

1. Close the AC supply breaker to supply AC power to the unit.

To verify that the Freedom SW starts charging:

2. After a few seconds, verify that the AC/Charge light on the front panel is turned on (indicating that the batteries are being charged).

To verify that Freedom SW correctly switches to Bypass mode:

3. Disable the AC source and turn off the inverter by pressing the Inverter Enable button.
4. Connect the test load to the AC output connection of the unit.
5. Enable the AC source and the test load should turn on after ten seconds.

Installation Complete

Your installation is now complete. The inverter/charger is ready for use.

The preceding tests use a light test load (a light bulb) as a test case. If you encounter problems when using a load over 1000 watts (for example, a hair dryer or microwave), see the troubleshooting information in the Freedom SW Sine Wave Inverter/Charger Owner's Guide.

This guide for use by qualified installers only.

Stacking Features

The Freedom SW inverter/chargers provide supports two stacking configurations. This gives the system engineer and/or installer more options to work with when tailoring a system to meet load demands. Multiple inverter/chargers of different power levels can be installed in a system as stand alone, parallel stacked, or series stacked.

In parallel stacking mode, only two Freedom SW inverter/chargers of the same model can be parallel-stacked. For example, two Freedom SW 2012s can be stacked in parallel as both units each have a 12-volt rating and a power rating of up to 2000 watts. For now, a Freedom SW 2012 which is 12-volt rated cannot be parallel-stacked with a Freedom SW 2024 which is 24-volt rated. See parallel stacking section.

In series stacking mode, you may stack two different Freedom SW inverter/chargers of different power ratings but same voltage ratings. For example, a Freedom SW 2012 can be series-stacked with a Freedom SW 3012. However, a Freedom SW 2012 which is 12-volt rated cannot be series-stacked with a Freedom SW 2024 which is 24-volt rated. See series stacking section.

CAUTION

DAMAGE TO INVERTER/CHARGER

When stacking two Dual Input Line/Dual Output Line (DI-DO) models such as two Freedom SW 3012 units, **do not** connect any wires to the **AC INPUT L2** terminals on both units at all. The same applies to the **AC OUTPUT L2** terminals on both units. Any damage sustained by non-compliance may result in non warrantable damage to the inverter/chargers. The only exception is **AC OUTPUT N2**. See parallel stacking section.

Failure to follow these instructions can damage the unit and/or damage other equipment.

Freedom SW 3K2K InvChg Install Guide.book Page 45 Wednesday, October 9, 2013 1:32 PM

Parallel Stacking

Allows the inverter and charger capacity of a system to be doubled. Parallel-stacked inverter/chargers can operate from different battery banks, meaning each unit is connected to its own battery bank. However, it is highly recommended to only use a single battery bank. See “DC Connections for Stacked Inverters” on page 48.

AC INPUT L2 terminals on both units must not be connected at all as they are not monitored lines.

IMPORTANT: Freedom SW models with dual AC lines do not monitor voltage and current on **AC INPUT L2** and **AC OUTPUT L2**. If any **L2** line is connected, any current flowing in this branch will not be displayed.

AC OUTPUT L1 and **AC OUTPUT L2** must not be connected together. However, the two output neutrals (**AC OUTPUT N1** and **AC OUTPUT N2**) can be tied together for redundancy. This reduces stress on the neutral path internal to the unit since two circuits will carry the load current.

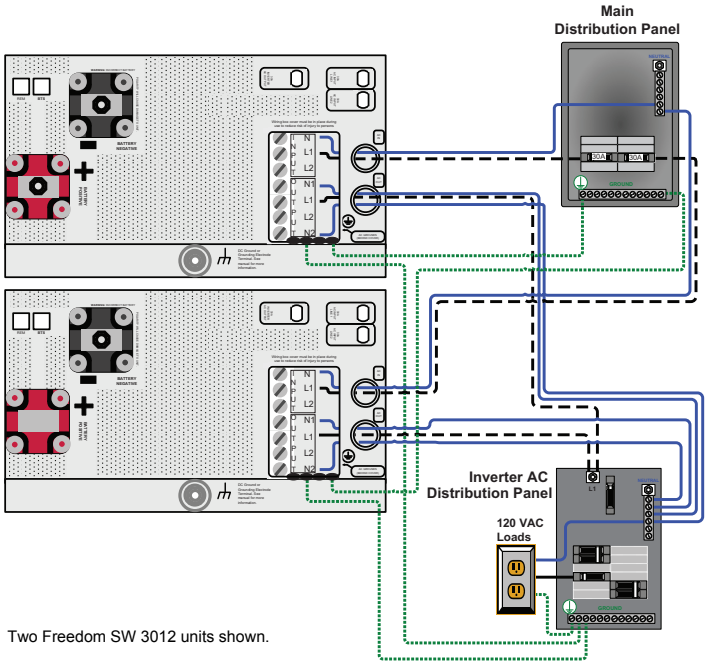

Figure 17 Parallel Stacking Using Two Freedom SW 3012s

This guide for use by qualified installers only.

Freedom SW 3K2K InvChg Install Guide.book Page 46 Wednesday, October 9, 2013 1:32 PM

Series Stacking

Allows two inverters to be configured to produce 120 and 240 volts AC, also known as, a single-phase three-wire configuration. Freedom SW models with the same DC voltage rating can also be assembled in a system. For example, a Freedom SW 3012 can be installed on **L1** while a Freedom SW 2012 operates on **L2**. However, it is important to remember that for Freedom SW inverter/chargers that support dual line AC configuration (DI-DO), only **AC INPUT L1** terminal should be used and that the **AC INPUT L2** terminal must have no connections at all. If **L2** is connected to any incoming or outgoing AC line, the inverter/charger may suffer internal damage not covered by warranty.

CAUTION

GENERAL PRECAUTIONS

- Always install stacked inverter/chargers in close proximity to each other.
- Connect AC neutrals together close to the inverters. Keep input and output neutrals isolated.
- Connect the inverter's battery negative terminals together according to instructions found in "Step 4: Connecting the DC Cables" on page 31.
- Make all AC and DC connections and verify that they are made in accordance with this manual. Make sure that all connections are tight (especially the DC side). Connect the stacker cable to each inverter's stacking port.
- Each inverter must be enabled and turned on individually before AC power becomes available.

Failure to follow these instructions can damage the unit and/or damage other equipment.

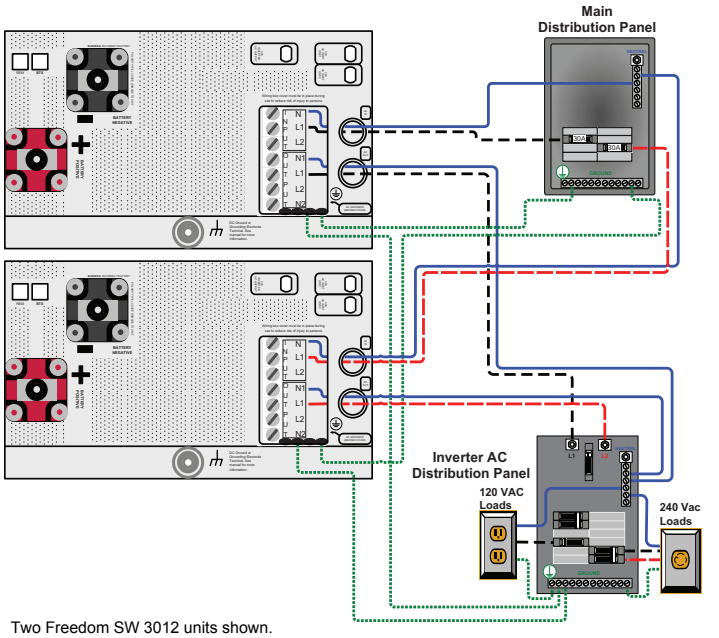

Figure 18 Series Stacking Using Two Freedom SW 3012s

Freedom SW 3K2K InvChg Install Guide.book Page 47 Wednesday, October 9, 2013 1:32 PM

Stacking Cable

For series stacking (120 and 240 volts), connect the Xantrex stacking cable between the two **STACKING** ports.

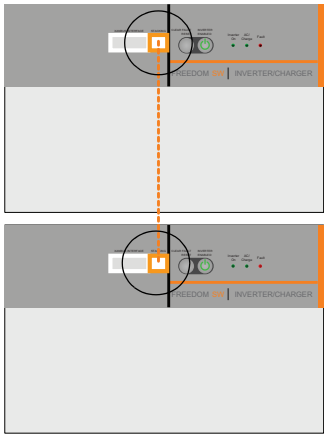

Two Freedom SW 3012 units shown.

Figure 19 Stacking Cable for Series Stacking

To order the stacking cable, call customer service and order part number 808-9005.

Series Stacking Operation

The inverter is designed to accept power input from a single-phase, three-wire 120/240-volt AC system with 120 volts to each inverter. The input line (**INPUT L** or **L1**) terminal of each inverter accepts one leg of 120 volts each and the input neutral (**INPUT N**) terminals of both inverters are tied together and connected to the power source neutral leg.

Any AC loads being powered while AC input is present to the inverters will be in addition to the power being drawn for charging the batteries. Each unit in the stack can provide a full pass-through current of 30 amps for 120-volt systems.

When AC input power is lost, both units in the stack switch from charger to inverter mode. Once this switch is made, 120 volts AC is available from each individual inverter or 240 volts AC is available across the output line (**OUTPUT L** or **L1**) terminals of the stacked pair.

Stacked inverters will typically support about twice the surge power of one standalone unit. For example, a Freedom SW 3012 stacked pair will surge about 12000 watts.

This guide for use by qualified installers only.

Freedom SW 3K2K InvChg Install Guide.book Page 48 Wednesday, October 9, 2013 1:32 PM

DC Connections for Stacked Inverters

Individual overcurrent devices are to be used between the battery positive and each inverter. Keep cable lengths to the two inverter/chargers the same in order to balance cable losses. If not, the battery cable difference in length between the two inverter/chargers should not exceed 12 inches (30.48 cm).

Connect the stacked system as follows:

1. Connect each negative terminal to the battery.
2. Connect a Grounding wire to the common negative.
3. Connect each positive terminal of the inverter to the battery through a DC disconnect in each positive line. Do not tie the positives together between inverters.
4. Connect the Ground bonding wire from each inverter to the same location on the vehicle chassis. Use that same length and gauge wire for both inverter/chargers.
5. Connect the battery temperature sensors (BTS), if needed.

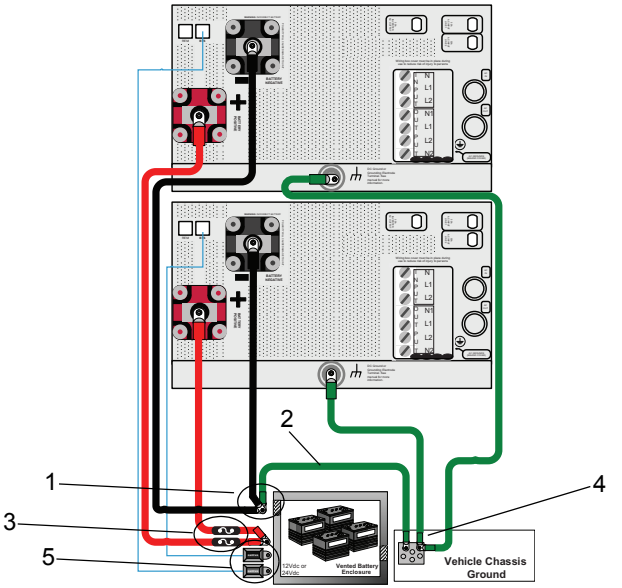

Two Freedom SW 3012 units shown.

Figure 20 Connecting Battery Cables and DC Ground Wires

Freedom SW 3K2K InvChg Install Guide.book Page 49 Wednesday, October 9, 2013 1:32 PM

Neutral Wiring for Stacked Inverters

Due to the neutral ground switching design of the Freedom SW Inverter/charger, it is mandatory that the **AC INPUT** and **AC OUTPUT N**eutrals be isolated from one another. In a stacked pair configuration, connect the two AC input neutrals together at the main distribution panel and the two AC output neutrals at an isolated neutral location in the inverter AC distribution panel.

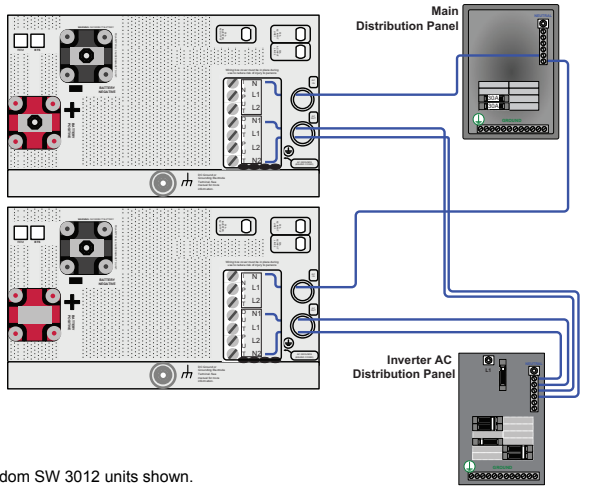

Two Freedom SW 3012 units shown.

Figure 21 Neutral Wiring for Stacking

Configuring System for Stacked Operation

Verify all DC and AC connections. Check Xanbus network connections and ensure that terminators are installed at devices at each end of the network. The simplest system includes a Xanbus SCP, the two Freedom SW inverter/chargers to be stacked and two Xanbus terminators.

For both units to operate in stacked configurations, a Master and Slave have to be assigned. The default out-of-box configuration for all Freedom SW inverter/chargers is **Master** which causes a conflict the first time the system is powered up. The installer will need to change configuration on one of the inverter/chargers to **Slave** mode.

To configure the system for stacking:

1. Apply DC power to both inverter/chargers.
   Power up order has no impact. Because there are now two Master units in the system, the SCP will display an **F66** fault, a “system configuration fault”.
2. From the SCP **System Status** screen, press **Enter**. The **Select Device** screen appears.
3. Select the inverter to configure as a Slave unit from the list, then press **Enter**.
4. Bring up the **Advanced Settings** screen by pressing **Enter**, Up, and Down arrow buttons all together.
5. Select **Advanced Settings** and press **Enter**. The Advanced Settings screen appears.

This guide for use by qualified installers only.

Freedom SW 3K2K InvChg Install Guide.book Page 50 Wednesday, October 9, 2013 1:32 PM

6. Scroll down to select **Stacking**.
   At this point all devices in the system will be automatically placed in standby mode. All three LEDs on the inverter to be configured will start flashing.

```
FSW3012 00: Stacking
Dev Name              [00]
Dev Number            [01]
Stack Mode         [Master]
```

[*Master] [Slave] [L2Master]

Figure 22 Stacking Menu Screen

7. Select **Stack Mode** and press **Enter**.
8. For Parallel Stacking: Select **Slave** and press **Enter**.

   For Series Stacking: Select **L2Master** and press **Enter**.
9. Press the **Func** button repeatedly until the **System Status** screen appears.

NOTES:

The only situation in which the Slave may shut down the Master inverter is during fault conditions such as high or low battery voltage, overcurrent, or over-temperature conditions. Both inverters will auto reset after a fault condition has been cleared. The exception is that an overcurrent condition will generate a shutdown for both inverters that will require a manual restart of the system.

Search Mode in Series Stacking

When configured for 120/240-volt series stacking, each inverter/charger operates independently in search mode and attempts to detect loads connected to its terminals only.

Freedom SW 3K2K InvChg Install Guide.book Page 51 Wednesday, October 9, 2013 1:32 PM

Search Mode Operation in Parallel Stacking

When two inverter/chargers are stacked for parallel operation, search mode behavior on the Slave unit is modified and is dependent on how much total load is on the system.

Disabling Search Mode on the Master Unit

In parallel stacking, search mode on the Master unit will not function properly. When the Master sends out a load search pulse, a small current also flows into the output of the Slave unit since the two outputs are in parallel. This Master unit falsely detects a load causing erratic search mode operation. For this reason, it is highly recommended to disable search mode on the Master unit in a parallel stacking system.

Setting Search Mode on the Slave Unit

The Slave unit will behave in one of two ways depending on whether its search mode is enabled or disabled.

Search mode enabled This is the recommended mode for parallel stacking and it helps minimize battery draw. The Slave unit continuously monitors the output of the Master unit. If the Master unit has more than 60% of the rated load (e.g., 1800 watts on Freedom SW 3012), the Slave unit will assist the Master and the two will share the load equally. Should the load on the Master drop below 20% of rated load (600 watts for Freedom SW 3012), the Slave unit disengages and returns to a waiting state.

Search mode disabled The Slave unit operates continuously along with the Master unit and shares the load.

Wiring Schematic

NOTE: Please refer to the Stacking Configuration sheet that shows the wiring schematic employed between two Freedom SW inverter/chargers that are stacked in parallel and in series.

IMPORTANT: Follow the same guidelines in “Installing the Inverter/Charger” on page 20 when choosing cables and/or wires for AC and DC connections.

⚠ DANGER

FIRE, ELECTRICAL SHOCK, AND ENERGY HAZARDS

Make sure all wiring being used to make stacking configurations between inverter/chargers is disconnected (physically or by opening the breaker) from all electrical sources before handling. All wiring must be done in accordance with local and national electrical wiring codes.

Failure to follow these instructions will result in death or serious injury.

This guide for use by qualified installers only.

Freedom SW 3K2K InvChg Install Guide.book Page 52 Wednesday, October 9, 2013 1:32 PM

Charger settings in a Dual Freedom SW configuration

The Freedom SW2012 includes a 100 A charger. When using two stacked Freedom SW2012 inverter/chargers connected to the **same battery bank,** a total of 200 A of bulk charging is possible into that single common battery bank. For small battery banks and/or certain battery types this bulk mode current may be too high, therefore Freedom SW models include the "**Battery Bank Capacity**" and "**Max Charge Rate**" settings.

"**Battery Bank Capacity**" is the bank's total Amp-hour capacity, this is best determined by a qualified RV electrical technician, while the "Max Charge Rate" is determined by the battery manufacturer/type of battery model being used, i.e. Flooded, Gel, AGM being the most popular. For "Flooded" type battery bank, the *preferred* charger capacity (A)/battery bank capacity (Ah) is usually 10-15%C (C = Battery Bank Amp-hour capacity), however the *max* charge rate allowable is often accepted as 25% C, while some AGM or Gel battery models are higher (50% C or, in rare cases, up to 100% C). Do not exceed battery manufacturers recommended max charge specifications as resultant battery temperature rise will shorten battery life.

Calculations

Once installed and configured, each Freedom SW charger calculates its own actual bulk charge current limit as follows:

(User selectable "Max Charge Rate" **%**) x (User selectable Battery Bank **Ah** capacity) = Actual maximum charger #1 **output Amps** in bulk mode (note: Limited to the Charger's maximum capacity) then,

(Charger #1 Actual **output Amps**) + (Charger #2 Actual **output Amps**) = "System Total BULK output" **Amps** (for the stacked pair).

This "Total bulk output current" flows into the battery bank. As this total bulk current is split/distributed within the bank thru each individual parallel and/or series connected battery, the current each battery "sees" **must not exceed each individual battery's max allowed charge current** as specified by the battery manufacturer. Since most battery banks are/should be constructed of the same battery type, model and length of interconnecting cables, current sharing is roughly equal through each parallel branch of battery(ies), therefore the above generalizations of "Max Charge Rate %" can be made for the entire bank.

The Freedom SW's "Max Charge Rate(%)" setting is set to "100%" by default, but is adjustable 0-100%, therefore if the charger has max possible 100 A (as in the FSW2012), when set to Max Chg Rate of 100% FSW2012 is capable of delivering its full 100 A into the battery bank. However if this is too high, the installer/operator may reduce this % setting to suit the system battery type and bank requirements/limitations, to avoid overheating the battery bank. The user/installer is responsible for configuring the charger to ensure the **battery manufacturer's recommended max charge rate Amps** is not exceeded for longest battery life and best performance.

Examples

Example 1: In a system composed of two stacked FSW2012's, industry commonly accepted practice suggests a typical Flooded battery bank of capacity (C) 400 Amp-hours should not be charged at a rate in excess of 25% of "C". i.e. 25% x 400(Ah) = 100 Amps. Therefore, when configuring the two stacked Freedom SW chargers, each charger must be limited to contributing max 50 A into the common battery bank. This is accomplished

Freedom SW 3K2K InvChg Install Guide.book Page 53 Wednesday, October 9, 2013 1:32 PM

by setting each charger's "Max Charge Rate"% setting to deliver ½ of the desired total battery bank charge rate **of 100 A**, i.e. In this example, each charger "Max Charge Rate" should be set to at most "50%" therefore 50% x **(charger max capacity of 100 A**) = 50 Amps actual max output, therefore since we have two chargers 50 A + 50 A = 100 A which is the max bulk current this battery bank can accept.

Example 2: The Freedom SW3012 includes a 150 A charger, when using two stacked Freedom SW3012 inverter/chargers connected to the same battery bank, a total of 300 A of bulk charging is possible.

In a system composed of two stacked FSW3012's. Industry commonly accepted practice suggests, a typical Flooded battery bank of capacity (C) 400Amp-hours should not be charged at a rate in excess of 25% of "C" i.e. 25% x 400(Ah) = 100 Amps. Therefore, when configuring the two stacked Freedom SW chargers, each charger must be limited to contributing max 50 A each into the common battery bank. This is accomplished by setting each charger's "Max Charge Rate"% setting to deliver ½ of the desired total battery bank charge rate **of 100 A**. i.e. in this example, each charger "Max Charge Rate" should be set to "33%" x **(charger max capacity of 150 A**) = 50 A actual max output, therefore 50 A + 50 A = 100 A which is the max bulk current this battery bank can accept.

Example 3: The Freedom SW 3012 includes a 150 A charger, when using two stacked Freedom SW3012 inverter/chargers connected to the same battery bank, a total of 300 A of bulk charging is possible.

In the above system composed of two stacked FSW3012's. Industry commonly accepted practice suggests, a typical Flooded battery bank of capacity (C) 1000 Amp-hours should not be charged at a rate in excess of 25% of "C" i.e. 25% x 1000(Ah) = 250 Amps. Therefore, when configuring the two stacked Freedom SW chargers, each charger must be limited to contributing max 125 A each into the common battery bank. This is accomplished by setting each charger's "Max Charge Rate"% setting to deliver ½ of the desired total battery bank charge rate **of 250 A**, i.e. in this example, each charger "Max Charge Rate" should be set to "83%" x **(charger max capacity of 150 A**) = 125 A actual max output, therefore 125 A + 125 A = 250 A which is the max bulk current this battery bank can accept.

Example 4: The Freedom SW 3024 includes a 75 A(@24 V) charger, when using two stacked Freedom SW3024 inverter/chargers connected to the same battery bank, a total of 150 A(@24 V) of bulk charging is possible.

Industry commonly accepted practice suggests, a typical Flooded battery bank of capacity (C) 600 Amp-hours (@ 24 V) should not be charged at a rate in excess of 25% of "C" i.e. 25% x600(Ah) = 150 Amps (@24 V). Therefore, when configuring the two stacked Freedom SW chargers, each charger must be limited to contributing max 75 A (@24 V) into the common battery bank. This is accomplished by setting each charger's "Max Charge Rate"% setting to deliver ½ of the desired total battery bank charge rate of **150 A**. i.e. in this example, each charger "Max Charge Rate" should be set to "100%" x **(75 A charger max capacity**) = 75 A actual max output, therefore 75 A + 75 A = 150 A which is the max bulk current this battery bank can accept.

This guide for use by qualified installers only.

Inverter/Charger Physical Specifications

For complete inverter/charger specifications, refer to the *Freedom SW Sine Wave Inverter/Charger Owner's Guide*.

The physical specifications of the Freedom SW are described in Table 5 below.

Table 5 Freedom SW Physical Specifications

Length	15.25 inches (387 mm)
Width	13.5 inches (343 mm)
Height	7.75 inches (197 mm)
Weight (2kW)	60.5 lb (27.5 kg)
Weight (3kW)	69.4 lb (31.5 kg)

Battery Information

Battery Bank Sizing

Battery capacity Battery size or capacity is just as important as the battery type selected for use with the Freedom SW. The batteries are the most important part of your system, so It is recommended that you purchase as much battery capacity as possible. A large battery will extend running time and ensure that your inverter/charger delivers full rated surge.

It is recommended a minimum battery size of 200 amp-hours (Ah) for moderate loads (<1000W) and greater than 400 Ah for heavy loads.

See “Estimating Battery Requirements” for information on a more detailed calculation.

About Amp-hours A number of different standards are used to rate battery energy storage capacity. Automotive and marine starting batteries are normally rated in cranking amps. This is not a relevant rating for continuous loads like an inverter. Deep-cycle batteries use a more suitable rating system such as amp-hours (Ah).

Amp-hour capacity is the number of amps a battery can continuously deliver during a specified number of hours. It is represented by the product of the two —amps multiplied by hours.

A typical marine or RV battery rated for 100 Ah can deliver 5 amps for 20 hours (5 amps × 20 hours = 100 Ah). This same battery can deliver a higher or lower current for less or more time, limited approximately by the 100 Ah figure (50 amps for 2 hours or 200 amps for 1/2 hour), but usually the capacity figure given is only accurate for the specified duration (20 hours).

Estimating Battery Requirements

Calculating Battery Size

Step 1: Compute Amp-hours

For each appliance, compute the number of amp-hours that will be used between charging cycles, as follows:

1. Obtain the wattage. If the wattage is marked on the nameplate rating, use that. Otherwise, multiply the marked voltage and amperage:
   WATTS = VOLTS × AMPS.
2. Obtain the Watt-hours by multiplying that amount by the hours the appliance will be used:
   WATT-HOURS = WATTS × HOURS.
3. Obtain the amp-hours that the appliance requires by dividing that amount by 10 (the factor for the Freedom SW, which is a 12-volt system):
   BATTERY AMP-HOURS USED = AC WATT-HOURS/10

For example, a 100 W light bulb that is used for 4 hours will use 400 watt-hours (Wh) and the inverter will consume approximately 40 Ah from a 12 volt battery.

4. Enter this information on the blank calculation worksheet (page 58).

Step 2: Calculate Battery Size

5. Complete the rest of the worksheet; see Table 6, “Battery Sizing Example” on page 56 for an example.

This guide for use by qualified installers only.

Size the batteries at approximately twice the estimated total amp-hour usage. Doubling the expected amp-hour usage ensures that the batteries will not be overly discharged and extends battery life.

Do not skip this doubling step. More capacity is better since you will have more reserve capacity, be better able to handle large loads and surge loads, and your battery won't be discharged as deeply. Battery life is directly dependent on how deeply the battery is discharged. The deeper the discharge, the shorter the battery life.

Troubleshooting If you find that the system shuts down when appliances with large motors are started, the problem may be that this motor is too much for the battery. Even though you calculated the amp-hour requirements appropriately, the startup of a large motor makes high demands on the battery. You may find that adding more amp-hours (in the form of extra batteries or replacement with a bigger battery) solves the problem.

Table 6 Battery Sizing Example

Appliance	(A) Power Consumption (Watts)	(B) Operating Time per Day (Hours)	Daily watt-hours needed for this appliance (= A × B)
TV & VCR	200 W	2 hours	400 Wh
Small microwave oven	800 W	15 min = 1/4 hour	200 Wh
3 lamps, 60 W each	180 W	4 hours	720 Wh
Coffee maker	600 W	15 min = 1/4 hour	150 Wh
Hair dryer	1500 W	6 min = 1/10 hour	150 Wh
Total daily watt-hours of AC load			1620 Wh
× Number of days between charges			3
= Total watt-hours of AC load between charges			4860 Wh
Battery Ah used between charges (divide by 10 for 12 volt system; divide by 20 for 24 volt system)			486 Ah
Recommended Battery Bank Size in Ah (multiply by 2)			972 Ah

This example illustrates how quickly your battery needs can escalate. To reduce the required battery bank size, you can either conserve energy by eliminating or reducing the use of some loads, or recharge more frequently.

Freedom SW 3K2K InvChg Install Guide.book Page 57 Wednesday, October 9, 2013 1:32 PM

Battery Banks

As your power requirements increase, you may need to use more than one battery to obtain sufficient capacity. Batteries can be connected in parallel, in series, or in series-parallel to create higher capacity systems.

See “Battery Cabling and Hook-up Configurations” on page 59 for more information about battery inter-connection schemes.

Mixing Batteries Batteries connected in parallel should be of the same type and amp-hour rating and from the same manufacturer.

It is not recommended to connect batteries of different types, amp-hour ratings or manufacturers. Improper charging and decreased battery life will result.

Battery Bank Sizing Worksheet

The following worksheet is a guide to help you determine your battery needs. Be generous in estimating the time for which you will run each of the loads to ensure sufficient battery capacity.

Restrictions on Motor Size

An appliance may require three to six times its normal running current in order to start. The Freedom SW can handle surges to 6000 watts for five seconds, which translates to a locked-rotor-amp rating of no more than 50 amps. The locked rotor amp may be specified on the motor nameplate as “LRA” or “LRI”.

When considering appliances with large motors, follow these guidelines:

- Make sure that the motor’s LRA rating is no more than 50 amps. The Freedom SW may not be able to start a motor with a higher LRA, and the Freedom SW will shut down if the attempt is made.
- Make sure the battery bank, DC cables and DC fuses are capable of handling up to 600 amps DC for five seconds. A weaker circuit may not be able to provide sufficient power to the Freedom SW to allow the Freedom SW to start up the appliance. Again, if the circuit cannot deliver the required current, the system may shut down or the fuse may open.

This guide for use by qualified installers only.

Freedom SW 3K2K InvChg Install Guide.book Page 58 Wednesday, October 9, 2013 1:32 PM

Table 7 Battery Sizing Worksheet

Appliance	(A) Power Consumption (Watts)	(B) Operating Time per Day (Hours)	Daily watt-hours needed for this appliance (= A × B)
	W	hours	Wh
	W	hours	Wh
	W	hours	Wh
	W	hours	Wh
	W	hours	Wh
	W	hours	Wh
	W	hours	Wh
	W	hours	Wh
Total daily watt-hours of AC load			Wh
× Number of days between charges			
= Total watt-hours of AC load between charges			Wh
Battery Ah used between charges (divide by 10 for 12 volt system; divide by 20 for 24 volt system)			Ah
Recommended Battery Bank Size in Ah (multiply by 2)			**Ah**

Battery Cabling and Hook-up Configurations

Several smaller batteries can be connected to create a battery bank of substantial size. You can connect batteries in three ways: in parallel, series, or series-parallel.

To make a larger battery bank, connect individual batteries with heavy cables. The actual size of the cable depends on whether the batteries are connected in parallel or series. Generally, the cable should not be smaller than the inverter cables—if the main cables are 4/0 AWG, the battery interconnects should be 4/0 AWG.

The best configuration is to connect the batteries in series and parallel. This requires additional cables, but reduces imbalances in the battery bank and can improve the overall performance. Consult your battery supplier for more information regarding the hook-up configuration required for your system.

Battery Parallel Connection

Batteries are connected in parallel when all the positive terminals of a group of batteries are connected and then, separately, all the negative terminals are connected. In a parallel configuration, the battery bank has the same voltage as a single battery, but an Ah rating equal to the sum of the individual batteries. See below.

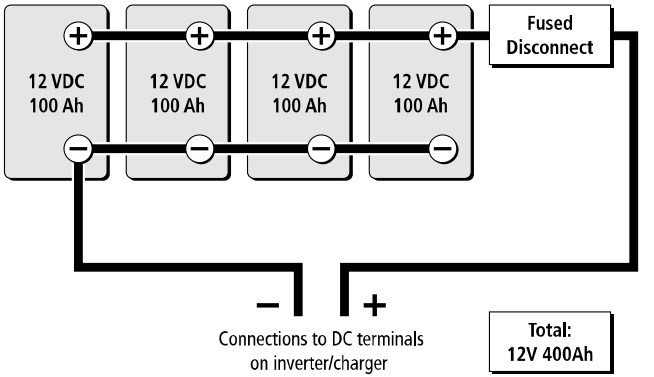

Figure 23 Batteries Connected in Parallel

This guide for use by qualified installers only.

Freedom SW 3K2K InvChg Install Guide.book Page 60 Wednesday, October 9, 2013 1:32 PM

Battery Series Connection

When batteries are connected with the positive terminal of one battery to the negative terminal of the next battery, they are connected in series. In a series configuration, the battery bank has the same Ah rating of a single battery, but an overall voltage equal to the sum of the individual batteries. See below.

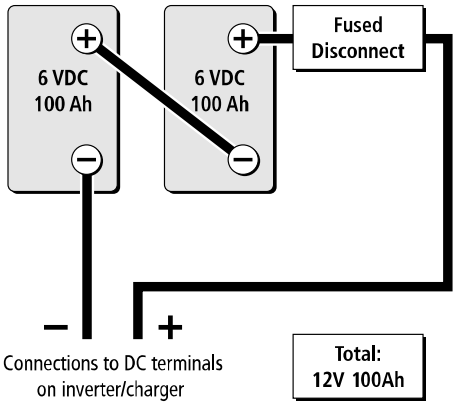

Figure 24 Batteries Connected in Series

Battery Series-Parallel Connections

As the name series-parallel implies, both the series and parallel configurations are used in combination. The result is an increase in both the voltage and the capacity of the total battery bank. This is common with all battery-inverter system voltages. The smaller, lower voltage batteries are first connected in series to obtain the necessary voltage, and then these “batteries connected in series” sets are connected in parallel to increase the battery bank capacity. See below.

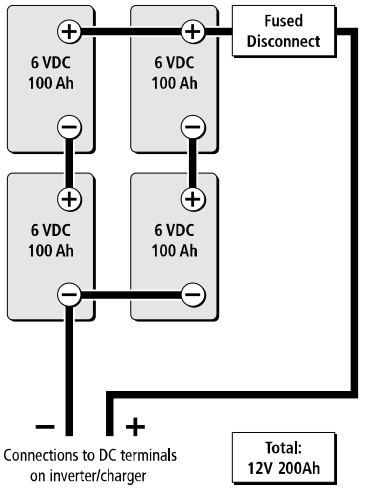

Figure 25 Batteries in Series-Parallel Connections

Specifications

NOTE: Specifications are subject to change without prior notice.

Physical Specifications	Freedom SW 2012	Freedom SW 2024	Freedom SW 3012	Freedom SW 3024
L × W × H	387×343×197 mm (15.25×13.5×7.75 in.)			
Net Weight	27.5 kg (60.5 lbs)		31.5 kg (69.4 lbs)	

Environmental Specifications	Freedom SW 2012	Freedom SW 2024	Freedom SW 3012	Freedom SW 3024
Nominal Ambient temperature	30 °C (86 °F)		40 °C (104 °F)	
Invert mode: • Operating range (full power) • Load @ maximum ambient	–20 to 30 °C (–4 to 86 °F) 1700W @ 60 °C		–20 to 40 °C (–4 to 104 °F) 2600W @ 60 °C	
Charge mode: • Operating range (full power) • Current @ maximum ambient	–4 to 104 °F (–20 to 40 °C) 80 A @ 140 °F (60 °C)	–4 to 104 °F (–20 to 40 °C) 40 A @ 140 °F (60 °C)	–4 to 77 °F (–20 to 25 °C) 120 A @ 140 °F (60 °C)	–4 to 104 °F (–20 to 40 °C) 60 A @ 140 °F (60 °C)
Storage temperature range	–67 to 167 °F (–55 to 75 °C)		–40 to 185 °F (–40 to 85 °C)	
Humidity: Operation/Storage	≤ 95% RH, non-condensing			
Altitude: • Operating • Non-operating	4,572 m (15,000 feet) 15,240 m (50,000 feet)			
Mounting	deck mount, wall mount with fans and DC/AC sides facing sideward			

This guide for use by qualified installers only.

NOTE: All inverter specifications are at nominal conditions: 12 (or 24) volts DC inverting 120 volts AC, unless otherwise specified.

Inverter Specifications	Freedom SW 2012	Freedom SW 2024	Freedom SW 3012	Freedom SW 3024
Output wave form	pure sine wave (true sine wave)			
Output power	2000 W (continuous at 30 °C)		3000 W (continuous at 40 °C)	
Surge rating (5 seconds)	4000 W		6000 W	
Output current	17 A		24 A	
Peak output current	55 A		80 A	
Output frequency	60 Hz ± 0.2 Hz		60 Hz ± 0.2 Hz	
Output voltage	120 VAC		120 VAC	
AC output connection/s	Single		Split phase in/dual out, Dual in/dual out	
Peak efficiency	90%	94%	90%	94%
No-load current draw (Inverter On)	<3 ADC	<1.5 ADC	<3 ADC	<1.5 ADC
Standby current draw (Inverter Off)	<0.25 ADC	<0.15 ADC	<0.25 ADC	<0.15 ADC
Input DC voltage range	10–16 VDC	20–32 VDC	10–16 VDC	20–32 VDC
Low battery voltage shutdown cut-off	10.5 V (selectable)	21.0 V (selectable)	10.5 V (selectable)	21.0 V (selectable)
High battery voltage shutdown cut-off	16.5 V (selectable)	33.0 V (selectable)	16.5 V (selectable)	33.0 V (selectable)

Freedom SW 3K2K InvChg Install Guide.book Page 63 Wednesday, October 9, 2013 1:32 PM

NOTE: All charging specifications are at nominal conditions: ambient temperature of 77 °F (25 °C), 120 VAC, 60 Hz input, unless otherwise specified.

Charger Specifications	Freedom SW 2012	Freedom SW 2024	Freedom SW 3012	Freedom SW 3024
Charging method	Three-stage charge (Bulk, Absorption, Float) Two-stage charge (Bulk, Absorption) The default charging method is three-stage.			
Without a battery temperature sensor	Three settings with the following temperature values: Cool 50 °F (10 °C) Warm 77 °F (25 °C) Hot 104 °F (40 °C) The default setting is Warm and it can only be changed by the factory, a dealer, or a service centre.			
With a battery temperature sensor (included)	The temperature compensation coefficients on a 12-volt battery are as follows: Flooded: 27 mV × (25 °C – BTS °C) Gel: 27 mV × (25 °C – BTS °C) AGM: 21 mV × (25 °C – BTS °C)		The temperature compensation coefficients on a 24-volt battery are as follows: Flooded: 54 mV × (25 °C – BTS °C) Gel: 54 mV × (25 °C – BTS °C) AGM: 42 mV × (25 °C – BTS °C)	
Output current (maximum)	100 ADC	50 ADC	150 ADC	75 ADC
Output voltage	12 VDC	24 VDC	12 VDC	24 VDC
Output voltage range	3.0–16.0 VDC	3.0–32.0 VDC	3.0–16.0 VDC	3.0–32.0 VDC
Equalization cycle	Automatic, Manual by Xanbus SCP		Automatic, Manual by Xanbus SCP	
Optimal charging efficiency	> 85%		> 85%	
AC input power factor at full charge rate	> 0.98		> 0.95	
AC input current	15.8 A (for 100 A charging)		22 A RMS nominal (for 150 A charging)	
AC input voltage	120 VAC		120 VAC	
AC input voltage range	85–140 VAC		85–140 VAC	
Dead battery charge voltage	> 5.0 VDC	> 12.0 VDC	> 5.0 VDC	> 12.0 VDC
Supported AC input types	Single input (up to 30 amps)		Split phase (up to 30 amps per line) Dual input (up to 30 amps per line)	

This guide for use by qualified installers only.

Specifications

NOTE: All transfer specifications are at nominal conditions: ambient temperature of 77 °F (25 °C), 120 VAC, 60 Hz input, unless otherwise specified.

Transfer and General Specifications	All Models
Transfer time—utility to invert	< 20 ms
Minimum AC input voltage for transfer	85 VAC RMS
Maximum AC input voltage for transfer	135 VAC RMS
Minimum AC input frequency for transfer	45 Hz
Maximum AC input frequency for transfer	70 Hz
Cooling	Fan-cooled, temperature controlled.

Regulatory Approvals	All Models
Safety	CSA 107.1, UL 458 with marine supplement, ABYC E11 - Alternating Current and Direct Current Electrical Systems on Boats, and ABYC A31 - Battery Chargers and Inverters.
EMC	FCC Part 15, Class B Industry Canada ICES-003, Class B

Inverter Drip Shield Installation

The inverter drip shield helps to protect the unit from dripping or splashing liquids, which will cause a shock hazard. The inverter drip shield is especially useful in marine installations where water from condensation, rain, or sea may come into contact with the Freedom SW.

⚠ WARNING

SHOCK HAZARD

Do not operate the unit under wet conditions and when the unit is wet. This product is intended only for use in dry areas. Installing the inverter drip shield may not entirely protect you from this hazard.

Failure to follow these instructions can result in death or serious injury.

You may purchase the inverter drip shield by contacting an authorized dealer. When ordering, mention part number 808-9004.

To install the drip shield:

1. Acquire ten #6-3/4 screws needed to fasten the inverter drip shield to the wall.
2. Locate an appropriate setting for the drip shield above the Freedom SW making sure you cover the entire width of the unit.
3. Fasten the screws through the holes in the drip shield into the wall.

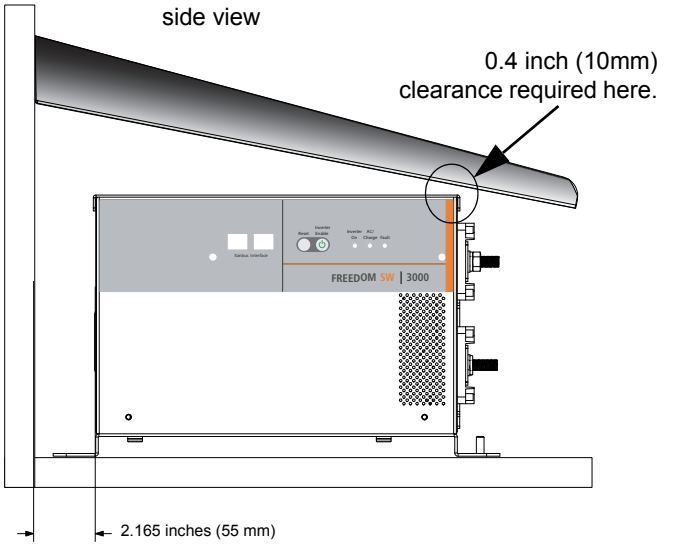

Figure 26 Drip Shield Placement (Desktop Mount)

This guide for use by qualified installers only.

Freedom SW 3K2K InvChg Install Guide.book Page 66 Wednesday, October 9, 2013 1:32 PM

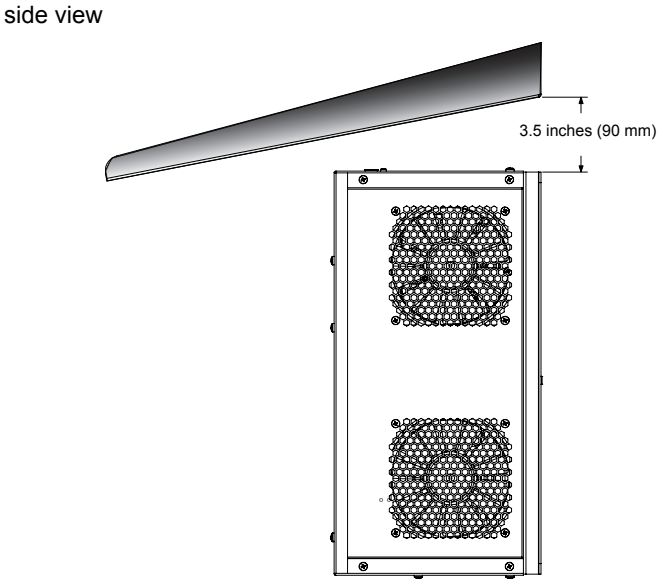

Figure 27 Drip Shield Placement (Inverter Front Panel Facing Up)

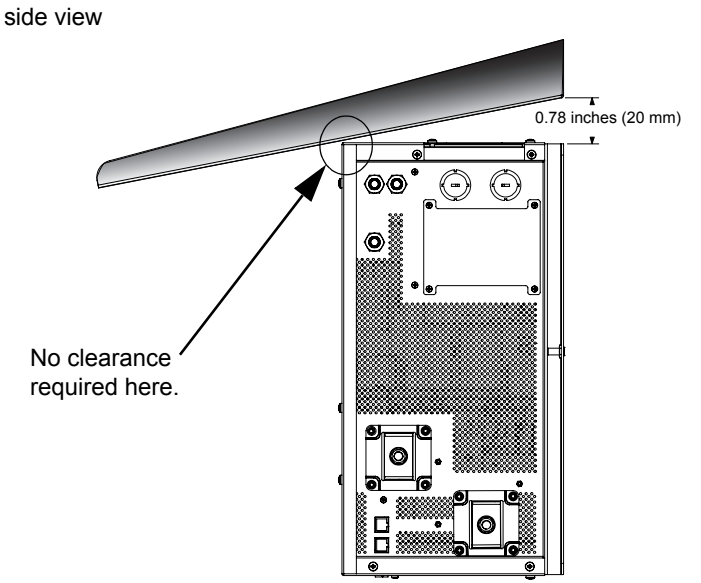

Figure 28 Drip Shield Placement (Inverter Front Panel Facing Down)

Schneider Electric Solar Inverters USA Inc.

1 800 670 0707 Tel toll free
1 408 987 6030 Tel direct

1 800 994 7828 Fax toll free

www.xantrex.com

97-0020-01-01

Printed in China.